S-AA-M-31

Cryogenic Target Handling System Operations Manual Volume IV–CTHS Description

Chapter 1: CTHS Overview

Table of Contents

Chapter 1
CTHS Overview

1.1 INTRODUCTION

The Cryogenic Target Handling System (CTHS) provides a unique capability of producing tritium (or deuterium) cryogenic targets for the Laboratory for Laser Energetics' (LLE's) direct-drive inertial confinement fusion (ICF) experimental program. The LLE experimental program studies the physics of hot-spot formation under near-ignition conditions, using these cryogenic targets.

A direct-drive ICF experiment requires a cryogenic target (at 18 K) to be placed in the center (within 10 μm) of the OMEGA target chamber. The OMEGA laser system (Fig. 1.1-1) is then fired, resulting in 60 high-energy pulsed (~1- to ~3-ns) beams impinging uniformly on the target surface (Fig. 1.1-2). (Volume 1 describes the OMEGA laser system in more detail.)

The power imparted on the target surface is approximately 30 times the energy on the entire U.S. power grid (for 1 ns). The resultant implosion takes the target from being one of the coldest points on earth to temperatures that are 10 times hotter than the surface of the sun (Fig. 1.1-3). The neutron yield from the 1-mm-diam target (~size of a period) requires 3 ft of concrete shielding for safe operation. The long-term goal is to use the energy from these fusion implosions to generate electricity. The energy resource from fusion energy is significant: the potential fusion energy in 1 cubic mile of sea water is equal to the world's entire oil reserves.

To achieve high gain and ignition in inertial confinement fusion (ICF) implosions, the targets must be driven by a very uniform laser pulse and the plasma must remain symmetric during the resulting radial compression until high temperatures and densities are created. The Rayleigh–Taylor instability (RTI) is a fluid phenomenon that causes nonuniformities in the interface between two fluids of different density to grow. In ICF, the RTI limits the compressed densities and temperatures by destroying the

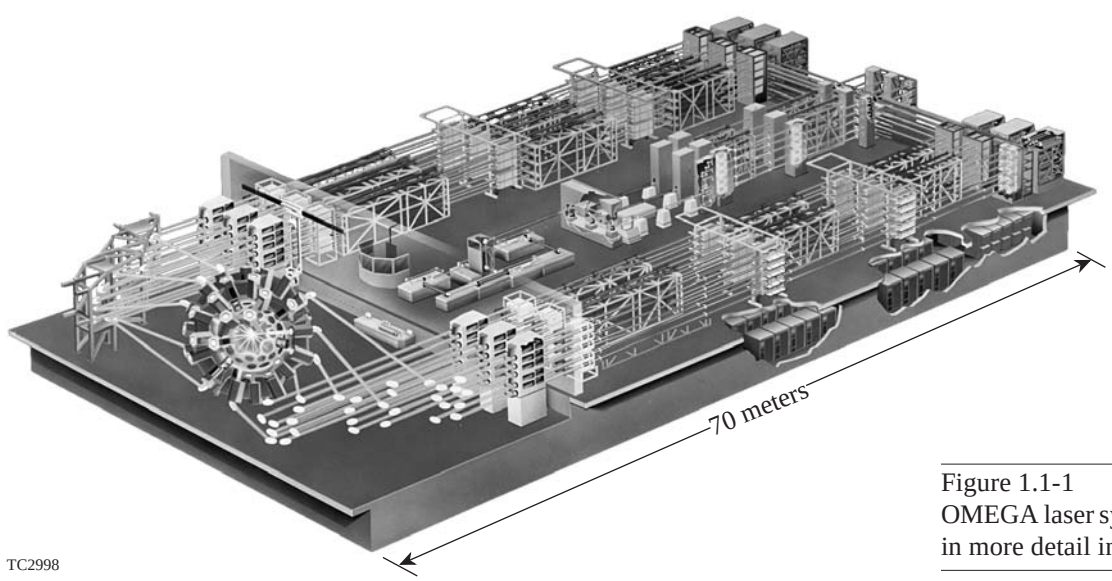

Figure 1.1-1
OMEGA laser system, described in more detail in Vol. 1.

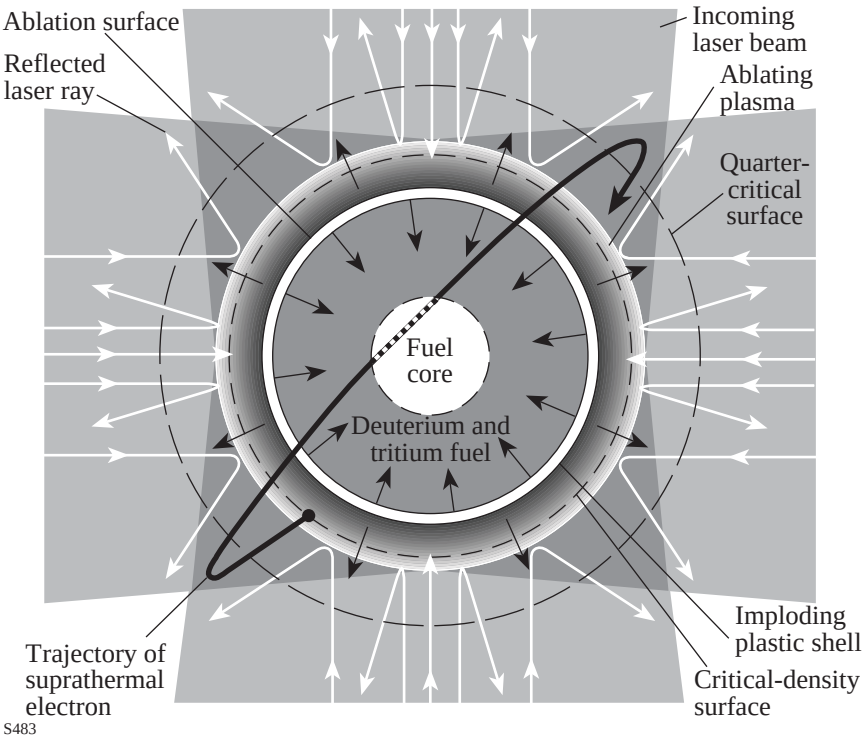

Figure 1.1-2
Laser–target interaction.

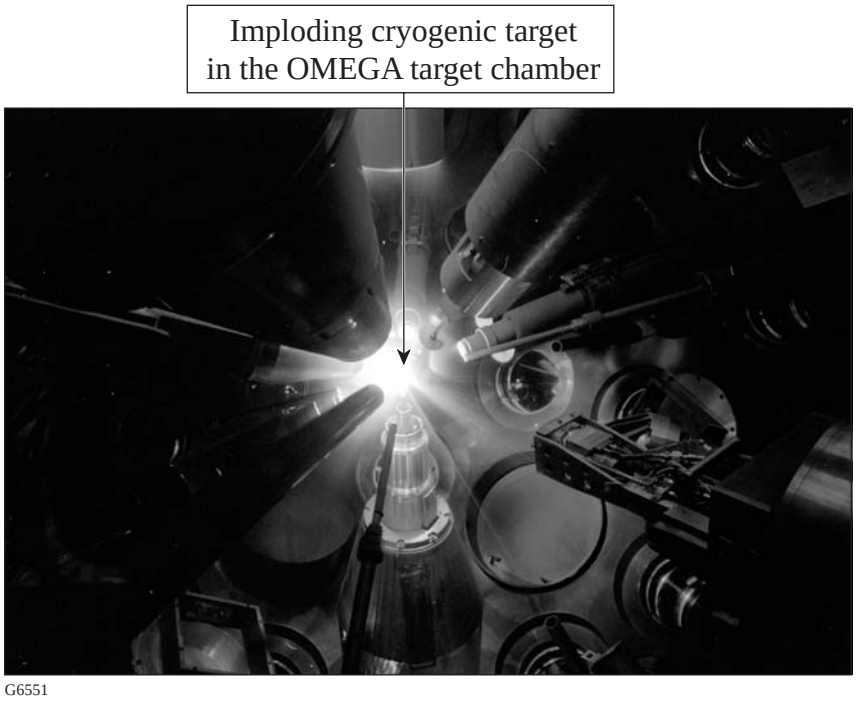

Figure 1.1-3
ICF implosion.

symmetry of the implosion. Because target imperfections can seed RT instability, the ice layer in cryogenic targets must be very uniform. The thickness and uniformity of the ice layer are critical parameters in achieving high-yield implosions.

Shadowgraphic images of the targets for shots 24089 and 24096 are shown in comparison with time-integrated x-ray pinhole camera (XRPC) images and x-ray framing camera (XRFC) snapshots (Fig. 1.1-4). The XRPC images show the thin plastic shell lighting up while the laser is on (early in time) and the formation of a core in the center of the image (late in time). The XRFC images are recorded at peak compression with an exposure time of 40 ps. A clear correlation between the layer quality in the shadowgraphic images and the core quality in the XRPC and XRFC images can be seen.

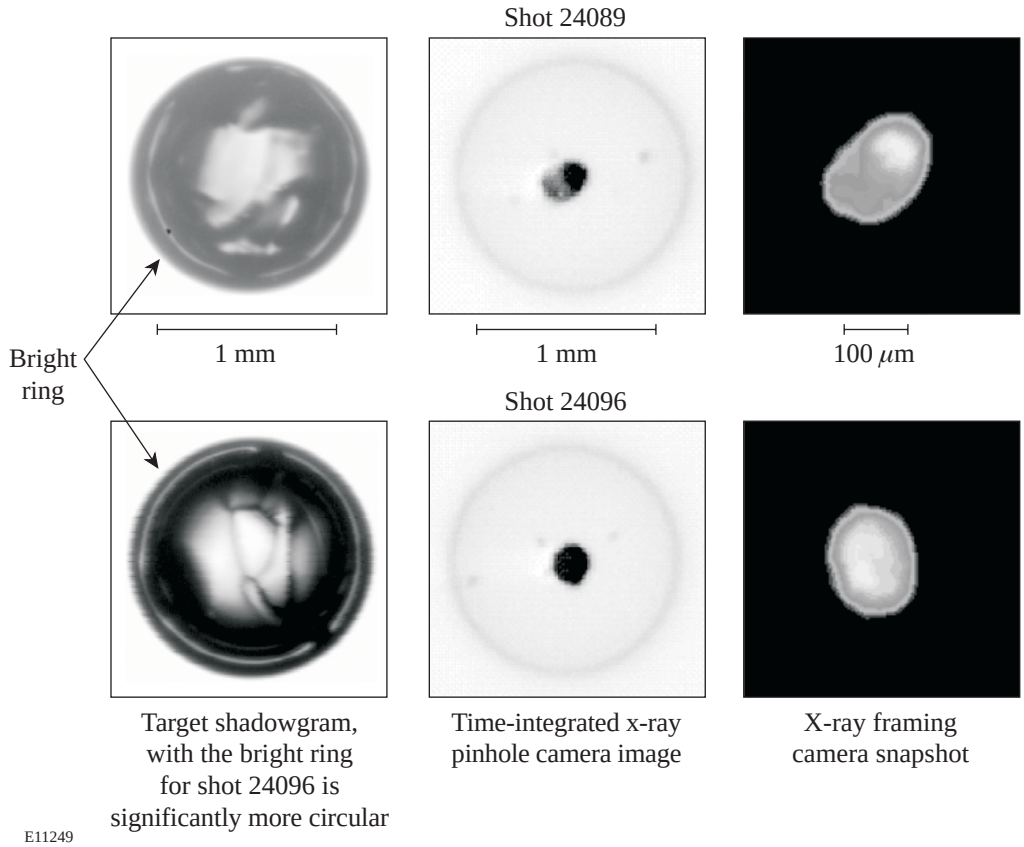

Figure 1.1-4
Ice-layer quality has a direct impact on the core quality.

Smooth ice layers (<1.2-μm rms) are achieved through layering. Forming an ice layer begins with a cold deuterium or deuterium–tritium–filled target that is in the liquid/vapor phases. The temperature of the target is then lowered to initiate solidification. As the liquid cools, some of it solidifies so that the vapor, liquid, and solid phases coexist (triple point). The solid phase (crystal) grows until it is contiguous throughout the capsule. Heat, generated either internally by tritium decay or externally by an infrared laser, causes the ice to redistribute, improving the layer quality. When the ice crystal is fully contiguous, the features in the ice can be observed and quantified. The technology on the CTHS characterization station has been upgraded so that smooth ice layers can be repeatedly achieved. These upgrades included the characterization viewing system, layering sphere, OPO (layering) laser closed-loop control, image acquisition software, 3-D characterization software, and a target information system.

The target position relative to the target chamber center (TCC) is an important factor in achieving symmetric and high-areal-density cores. The target image passes through three shroud windows before it is acquired by the camera; the offsets caused by these windows must be accurately accounted for

when placing the target at TCC. In addition, displacement caused by target vibration must be minimized. The shroud that protects the target is removed rapidly seconds before the shot; this shroud removal process can cause target displacement due to vibration in excess of 70 μm. There has been a significant effort at LLE to minimize target vibration and ensure accurate target positioning to within 10 μm of TCC. The equipment optimized in this effort includes the OMEGA Target Viewing System, the moving cryostat shroud windows, the moving cryostat four-axis positioner, the upper-pylon shroud removal retraction profiles, the OMEGA rate interrupt module, the lower-pylon docking plate upgrade, the target stalk assembly, and the Fill/Transfer Station end effector.

The Cryogenic Target Handling System (CTHS) fills targets with deuterium or deuterium–tritium to pressures up to 1000 atm and then cools the targets to ~18 K. Smooth ice layers are then formed in the layering process and the target is characterized. Finally, the target is transported to the OMEGA lower pylon and positioned in the center of the target chamber where it is shot. The major CTHS equipment for this process is as follows:

- the Moving Cryostat and Transfer Cart (MCTC)
- the Tritium Fill Station (TFS)
- the DT High-Pressure System (DTHPS)
- the Fill and Transfer Stations (FTS)
- the Characterization Stations (CS)
- Lower Pylon (LP)
- Upper Pylon (UP)
- Tritium Removal Systems (TRS)

Most of this equipment is located in Room 157 (Fig. 1.1-5). This document describes the design, operation, and integration of the CTHS equipment listed above.

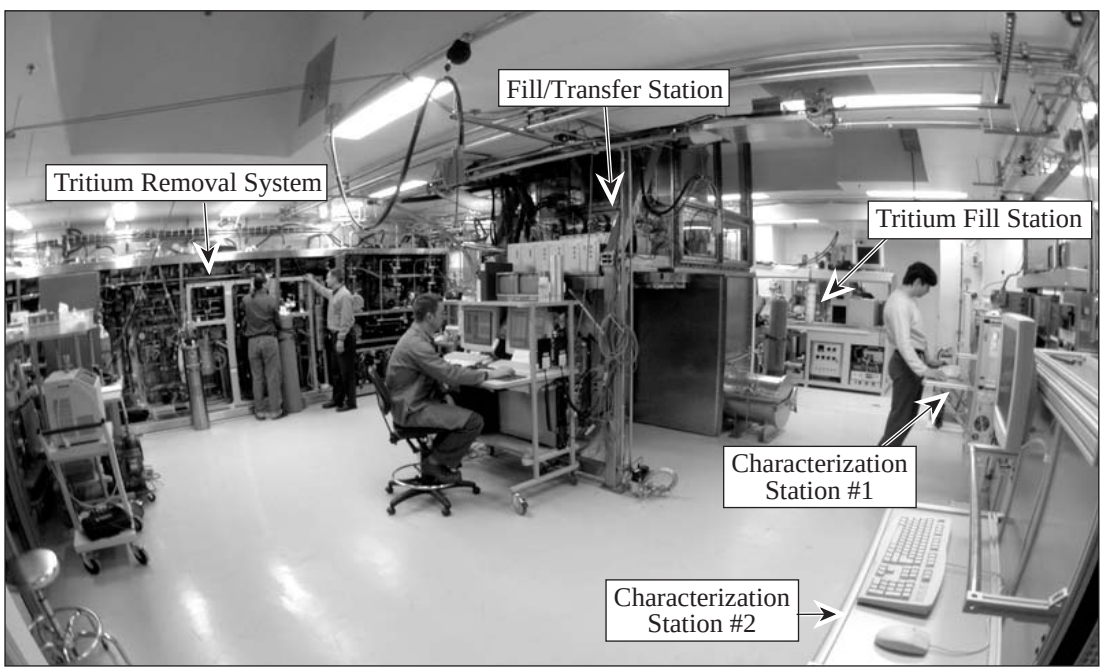

T1789

Figure 1.1-5
Photograph of Room 157.

1.2 TARGET FABRICATION

The LLE Target Fabrication Facility is used to fabricate, assemble, and characterize the capsules (Fig. 1.2-1) that are utilized by the CTHS facility. The CTHS facility fills these capsules with DD or DT. Target Fabrication has developed physical and analytical methods for the preparation, inspection, and mounting of the ICF targets. Chapter 2 describes target fabrication in more detail.

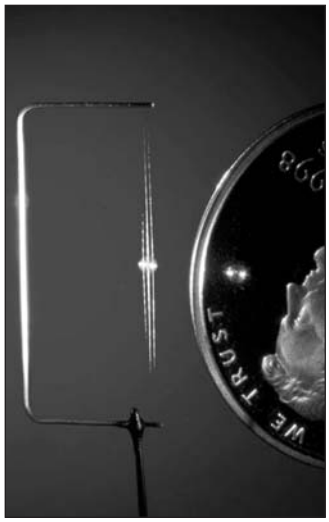

G6542

Figure 1.2-1
Spherical cryogenic target on a C-mount assembly.

1.3 MOVING CRYOSTAT AND TRANSFER CART (MCTC)

The MCTC enables the transfer of targets between the Fill/Transfer Station (FTS), the characterization station, and the OMEGA target chamber while maintaining the cryogenic temperature and vacuum pressure necessary to preserve the target.

The MCTC houses all of the cooling, vacuum, and control equipment required to maintain the MC at the required low-temperature, high-vacuum conditions (Fig. 1.3-1). A major feature of the MCTC is an evacuated umbilical spool that manages the electrical and fluid lines that connect the MC to the equipment on the cart. The entire MCTC is mounted on a pneumatic bearing system that allows operators to push it from place to place within the facility. Chapter 3 describes the MCTC in more detail.

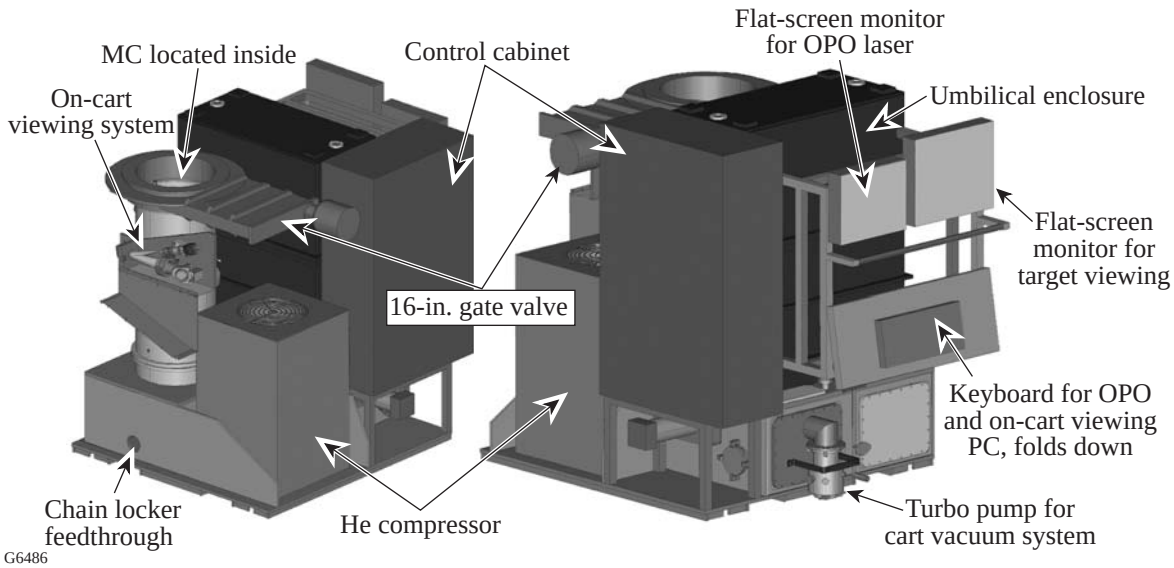

Figure 1.3-1
Moving Cryostat Transport Cart

1.3.1 Moving Cryostat (MC)

The MCTC (shown in Fig. 1.3-1) can be divided into two subsystems: the moving cryostat and the moving cryostat transfer cart. The MC houses the target in a vacuum cryogenic environment and the cart provides the cooling, vacuum, controls, and power services to the MC.

As seen in Fig. 1.3-2, the MC is a cylindrical device with a 16 in.-diameter and is approximately 30 in. long. The frozen target is mounted on a stalk and centered within an integrating sphere. The integrating sphere and stalk are insulated by a series of nested shrouds that act as heat sinks and thermal shields to remove heat in a controlled fashion (see Fig. 1.3-2).

The parts of the MC are shown in Fig. 1.3-2: (a) the MC base and (b) the components that make up the upper shroud. The inner, middle, and outer shrouds shown in the figure are joined to form a single upper shroud assembly that can move in a vertical direction over the target and mate with the lower shrouds on the base. In this configuration, the target is centered in the "layering sphere." The layering sphere is a metal cylinder with an internal spherical cavity that is cooled to provide the low-temperature, spatially uniform radiation environment that promotes the formation of a smooth, concentric ice layer on the inside surface of the target capsule.

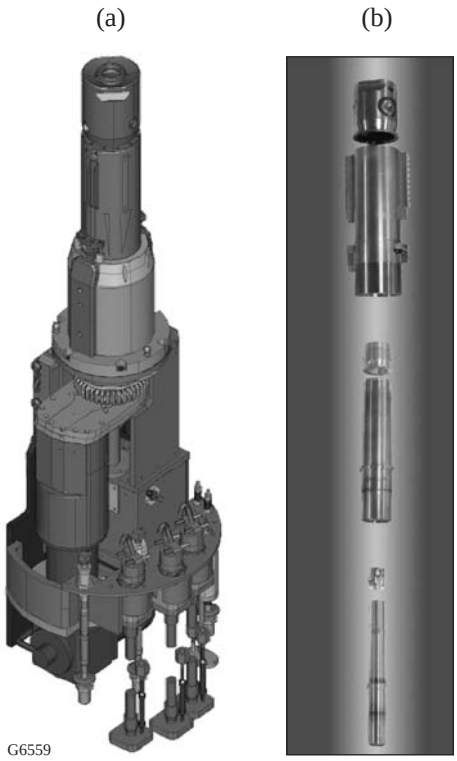

Fig. 1.3-2
(a) Spherical MC; (b) upper shroud assembly showing the outer, intermediate, and inner shrouds.

1.4 TRITIUM FILL STATION (TFS)

The TFS is used for room-temperature, low-pressure fills and, in conjunction with the DTHPS, for cryogenic, high-pressure fills. For room-temperature, low-pressure fills, a maximum of 18 1-mm-diam targets with 10-μm walls are filled to 10 atm in ~1 day.

For cryogenic, high-pressure fills, the TFS is used to supply tritium to the DTHPS to fill a maximum of four targets. The high-pressure DT-fill process is described in Chap. 13. These high-pressure fills require 18 h to pressurize targets and 2 days to cool targets.

As illustrated in Fig. 1.4-1, the tritium-handling equipment is entirely housed in a helium glovebox that has an integral tritium-decontamination unit and a backup tritium scrubber. The system is computer controlled throughout the multi-day filling sequence. All of the safety devices are passive fail-safe components. The TFS is desribed in more detail in Chap. 5.

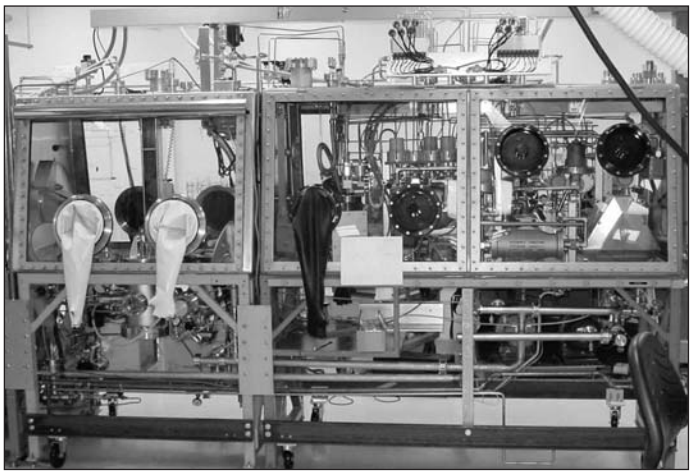

G6041

Figure 1.4-1
The Tritium Fill Station process equipment can be seen through the three panels. The panel on the right houses the U-beds and pumps; the middle panel contains the contact tube and condensation cell. The left panel is used as a pass box to bring equipment or targets in and out of the TFS. The panel on the left also provides cold storage for room-temperature, low-pressure-filled targets.

1.5 DT HIGH-PRESSURE SYSTEM (DTHPS)

The DT High-Pressure System (DTHPS) (Fig. 1.5-1) fills polymer spherical targets located in the FTS permeation cell. The tritium is transferred to the DTHPS condensation tube from the Tritium Fill Station. The DT is then permeated into the shells by slowly ramping up the pressure inside the permeation cell to ~1000 atm. Because the thinnest-walled shells have buckling pressures of 0.1 atm, precise control of the pressure differential across the shell wall is required during pressurization and cooldown. The entire high-pressure DT-fill process requires approximately 100 operations and involves the TFS, DTHPS, FTS, and TRS.

Each of LLE's two Fill/Transfer Stations utilizes a different high-pressure fill technique. The FTS#1 design utilizes a condensation cell and diaphragm compressor to achieve the desired pressures. This is called the DT High-Pressure Fill System (DTHPS). The FTS#2 design utilizes a condensation cell and controlled heating to achieve the desired pressures. The DTHPS is described in more detail in Chap. 6.

Filling thin-walled targets takes 8 to 60 h, depending on the characteristics of the targets. To fill them as quickly as possible, the pressure is increased at a uniform rate such that the external pressure exceeds the internal pressure by an amount that is less than the buckling pressure. Filling a 1-μm-wall target to 1000 atm at room temperature requires more than 30 h.

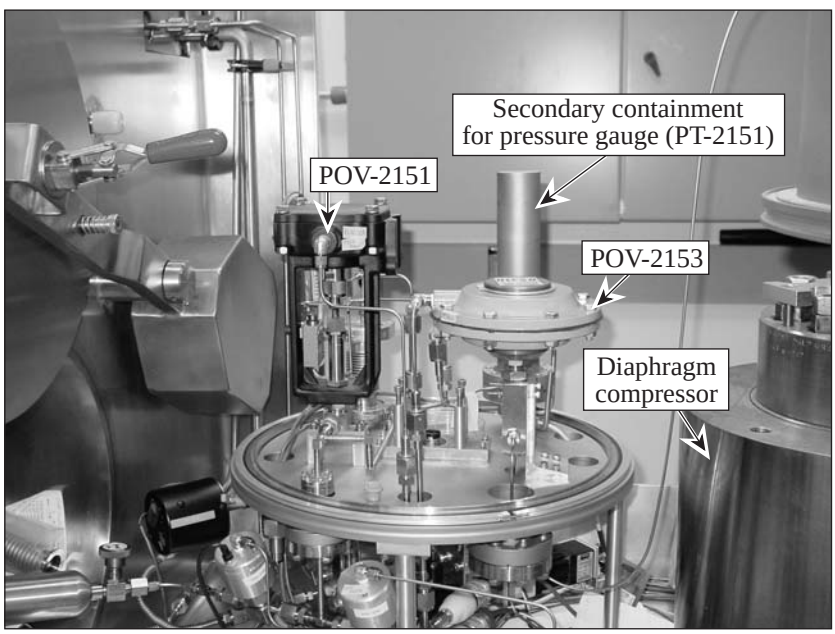

G6081

Figure 1.5-1
First-stage compression.

1.6 FILL/TRANSFER STATION (FTS)

The CTHS equipment in Room 157 includes two fill/transfer stations. Each station functions in conjunction with other major equipment to fill cryogenic targets. The two stations are referred to as FTS-1 and FTS-2. FTS-1 is configured for both DD and DT fills. It is connected to the DTHPS, features a secondary containment glovebox, and is supported by the Room 157 TRS vacuum manifold system. FTS-2 is a newer system that is supported by a separate DD high-pressure system of a different design. It has no glovebox and utilizes a separate vacuum system. FTS-2 will be used exclusively for DD fills.

The filling, cooling, and transfer activities in the FTS occur within the confines of a large, 800-L cylindrical cryostat, which is maintained at vacuum and cryogenic temperatures (see Fig. 1.6-1). The permeation cell is inside the cryostat and houses up to four 1-mm-diam, thin-walled, polymer targets while they are permeation filled at room temperature to approximately 1000 atm and cooled to approximately 18 K. Other components of the FTS are used to transfer the cold targets, one at a time, to an MCTC.

The FTS is supported by a number of external systems including a liquid nitrogen (LN_2) supply system, a battery of helium compressors, a glovebox cleanup system, a vacuum pump system, and helium and nitrogen gas supply systems. The FTS is described in more detail in Chap. 7.

G6105

Figure 1.6-1
The FTS shown with the dome raised.

1.7 CHARACTERIZATION STATION (CS)

The Characterization Station (CS) is where the smooth, uniform ice layer is formed on the internal surface of the target in a process called layering. The smoothness of the ice layer is measured and characterized before the target is shot.

Two identical characterization stations, one of which is shown in Fig. 1.7-1, are located in Room 157. They are used to image the contents of targets in order to diagnose the state of the fuel and to characterize the ice layers formed during the laying process. Each characterization station consists of an optical table that is fitted with a moving cryostat docking station and a two-axis viewing system, which includes a scientific-grade CCD (charge-coupled device) camera. The optical table is mounted on an active vibration isolation system and supported at an elevation that allows a moving cryostat transfer cart (MCTC) to be positioned under it. The moving cryostat (MC) can then be elevated into the docking station so that the target is visible to the viewing system. The CS is described in more detail in Chap. 8.

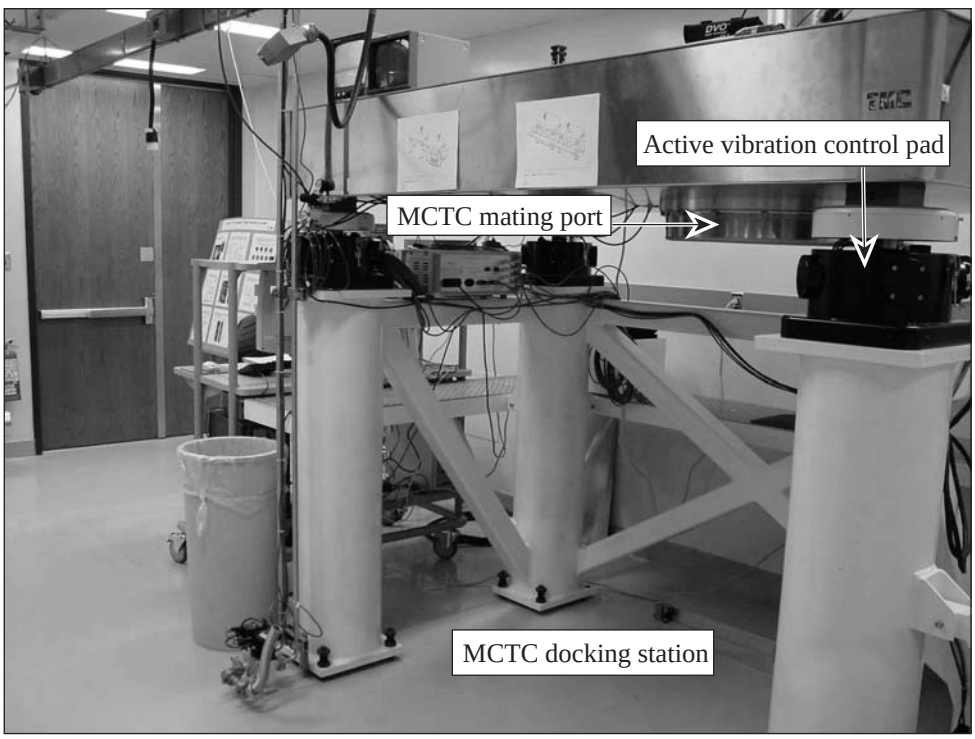

G6160

Figure 1.7-1
Characterization station showing the four pylons, MCTC docking station and mating port, and active vibration control pads.

At the upper end of the upper shroud is the gold-plated copper layering sphere that surrounds the target and is conductively connected to the cold head at the base of the MC. Some of the features of the layering sphere illustrated in Fig. 1.7-2 include two of the four optical ports that are used to illuminate and view the target and the keyhole opening that clears the target when the shroud is placed or removed.

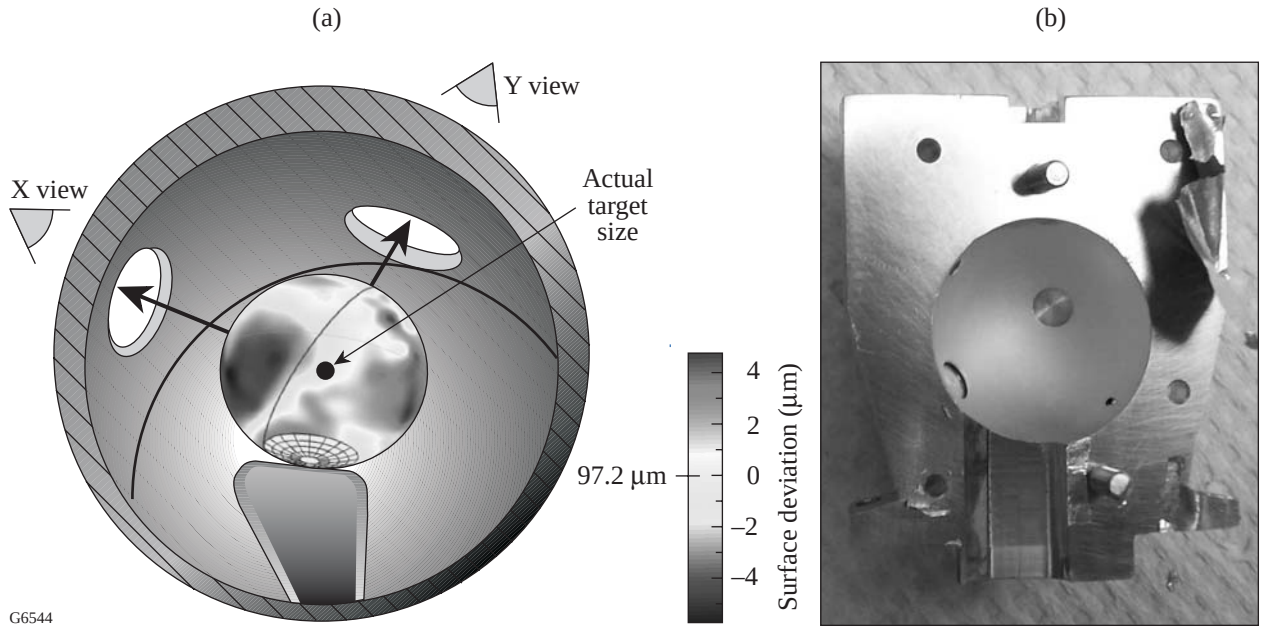

Figure 1.7-2
(a) Layering sphere with view ports and (b) half of the layering sphere before assembly.

The layering sphere is also equipped with a resistance heater and a temperature sensor. The interior surface of the layering sphere is roughened to enhance its thermal radiation characteristics so that it can function as an integrating sphere to bathe the target uniformly with thermal radiation from the laser fiber.

Measuring the ice-layer quality is achieved by rotating the target and acquiring images of the target from multiple views. Once the rotation set has been taken, the images are analyzed using a Matlab routine. This software finds the perimeter of the plastic and the center of the target and determines the distance of the ice's inner surface from the center of the target (ice thickness). The ice thickness is then anaylized and quantified. This process is called characterization.

1.8 LOWER PYLON (LP)

The equipment shown in Fig. 1.8-1 has been installed in the OMEGA target area to allow cryogenic targets to be positioned and shot. The lower pylon, supported by the target chamber (TC), extends downward from the center of the TC and through the Target Bay floor. Rigidity is provided by additional lateral support to the Target Bay floor. The lower pylon is basically a cylindrical vacuum vessel fitted with a kinematic dock inside its upper end and an isolation valve and flange at its lower end. The moving cryostat (MC) is placed at target chamber center (TCC) by the lower pylon equipment. The lower pylon is described in more detail in Chap. 9.

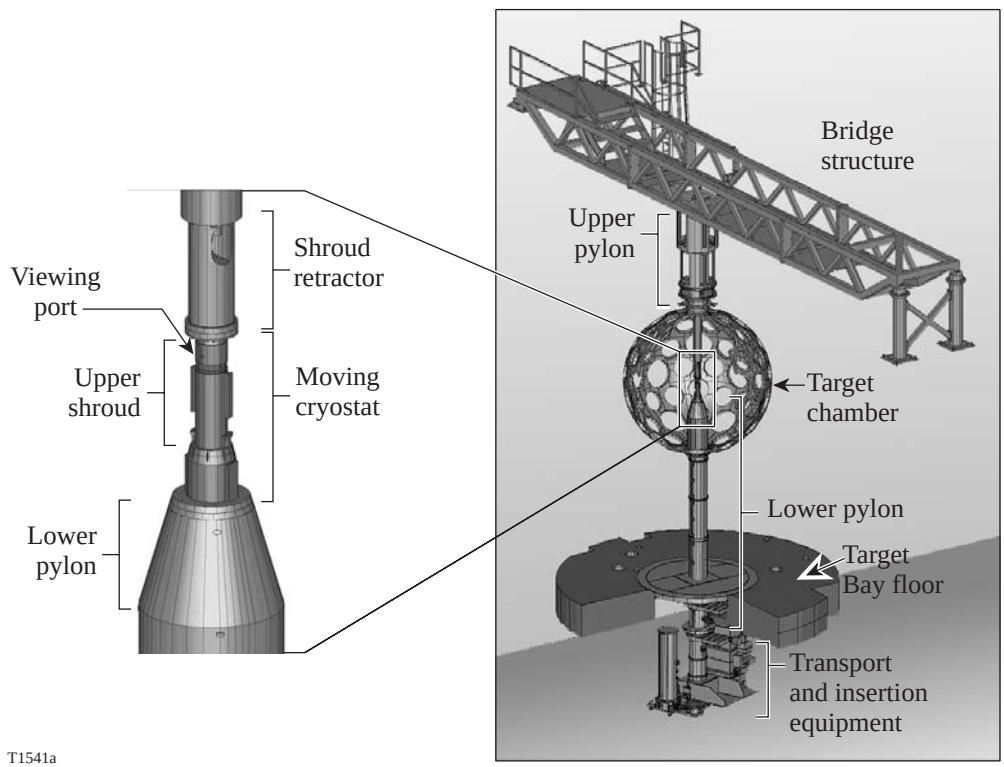

Figure 1.8-1
(a) Lower pylon with MC docked at TCC; (b) lower pylon overview.

The chain locker (Fig. 1.8-2) contains the chain assembly used to transfer the Moving Cryostat to TCC via the lower pylon. The chain is stored in a spiral guide track. During Moving Cryostat insertion, the chain is driven from the chain locker, through the chain guide tube, and up the lower pylon by the action of the chain locker stepper motor and controls. As the chain passes through the MCTC, it picks up the MC and drives it to TCC. All of the chain locker controls and associated equipment are controlled from the lower pylon PLC.

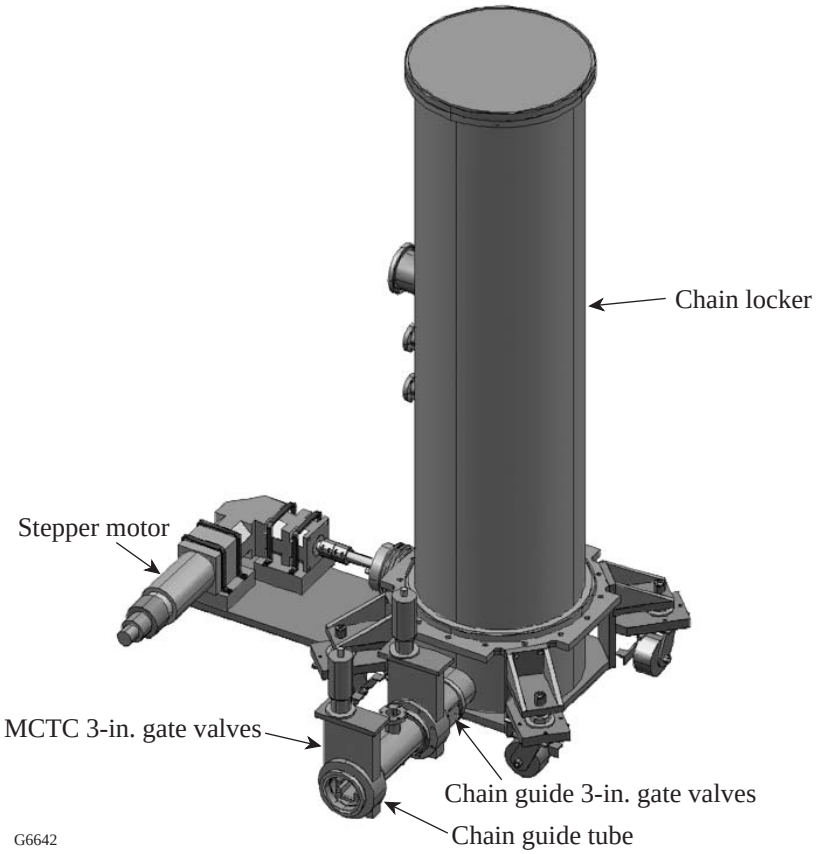

Figure 1.8-2
Lower Pylon chain locker.

1.9 UPPER PYLON (UP)

Figure 1.8-1 shows the upper pylon extending from above the center of the TC through a bellows joint at the top of the TC. The upper pylon (UP) (Fig. 1.9-1) is supported by a bridge structure that spans the Target Bay. A linear induction motor and shroud retractor are housed within the upper pylon and are used to remove the shroud just before the shot.

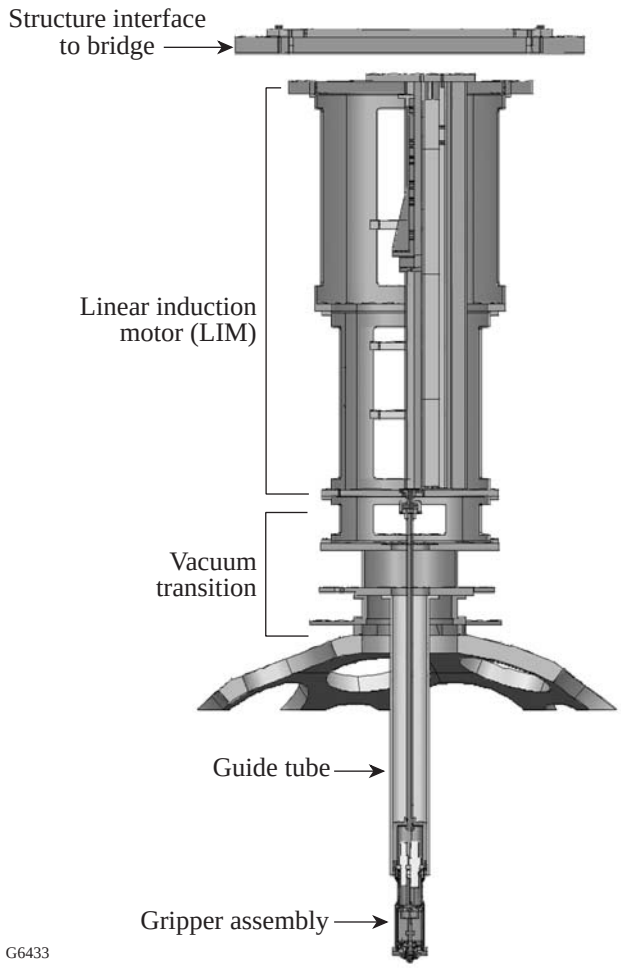

Figure 1.9-1
The mechanical components of the upper pylon are suspended from the bridge and extend into the target chamber via a vacuum transition that includes an isolation bellows.

1.10 CART MAINTENANCE ROOM (CMR)

The cart maintenance room provides the services required to maintain the Moving Cryostat Transfer Cart. This equipment includes the cart decontamination station, vacuum systems, an overhead crane (Fig. 1.10-1), hooded work stations, a cart test stand, and a decontamination sink. Chapter 11 describes the CMR in more detail.

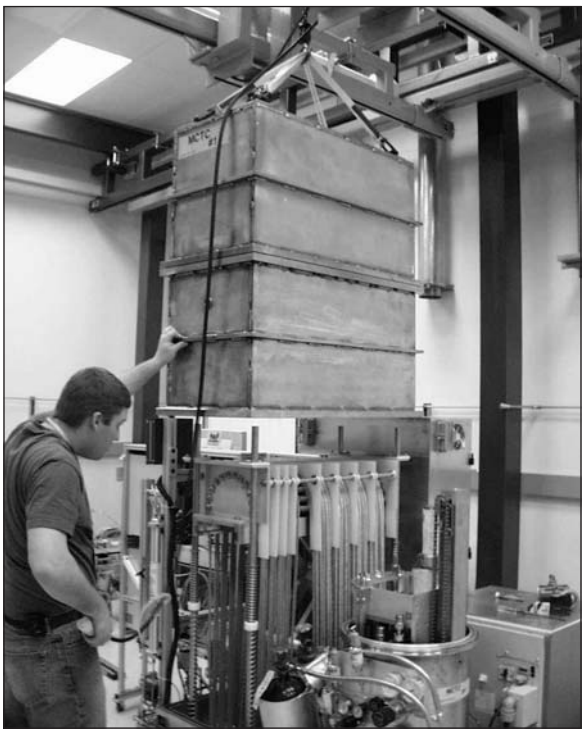

G6546

Figure 1.10-1
The MCTC umbilical enclosure being removed in the Cart Maintenance Room.

1.11 ROOM 157 OVERVIEW

Room 157 (Fig. 1.11-1) is used to prepare room-temperature and cryogenic targets filled with deuterium or a mixture of deuterium and tritium. The room has been constructed and is operated to ensure that it is isolated from the remainder of the LLE building in the event of a tritium release. The ceiling panels are made of nonporous metal and are caulked against their frame to make a leak-tight surface. The walls are painted with a nonporous paint. The floor is coated with a tough epoxy that forms a skirt around the wall to inhibit the spread of contamination and facilitate decontamination. Room 157 is described in more detail in Chap. 3.

The Room 157 Vacuum Manifold Subsystem (VMS) was designed and built as a part of the Room 157 TRS. It is a flexible arrangement of valves, manifolds, and pumps that connect to all of the vacuum volumes in the room. The VMS provides vacuum services to these “customer” volumes and delivers the exhausts to the TRS. The normal configuration of the VMS provides four separate, pumped manifolds that are used to service groups of customer volumes on the basis of their specific needs.

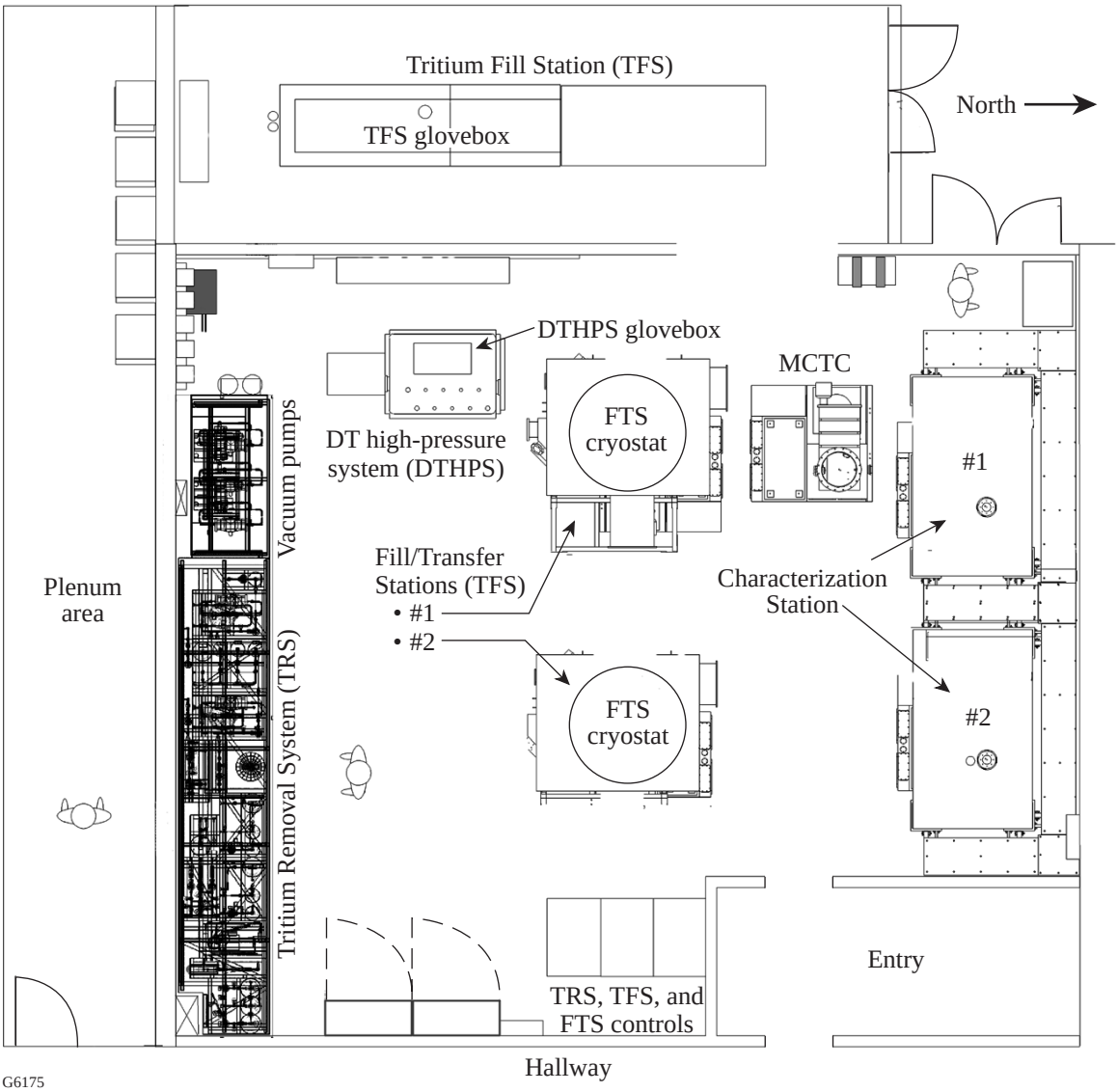

Figure 1.11-1
Room 157 floor plan.

1.12 TRITIUM REMOVAL SYSTEMS (TRS)

Two tritium removal systems in the LLE facility support the ICF program: the Room 157 TRS and the Target Chamber TRS. Figure 1.12-1 illustrates how the Tritium Removal System is integrated with the Room 157 process equipment and target chamber. The Room 157 TRS (Fig. 1.12-2) supports the target-filling and characterization activities that take place in Room 157 by removing tritium from the gas streams before the effluent is discharged to the stack. Chapter 12 (Vol. IV) describes the Room 157 Tritium Removal System (TRS) and covers the design, construction, and operation of the system in more detail.

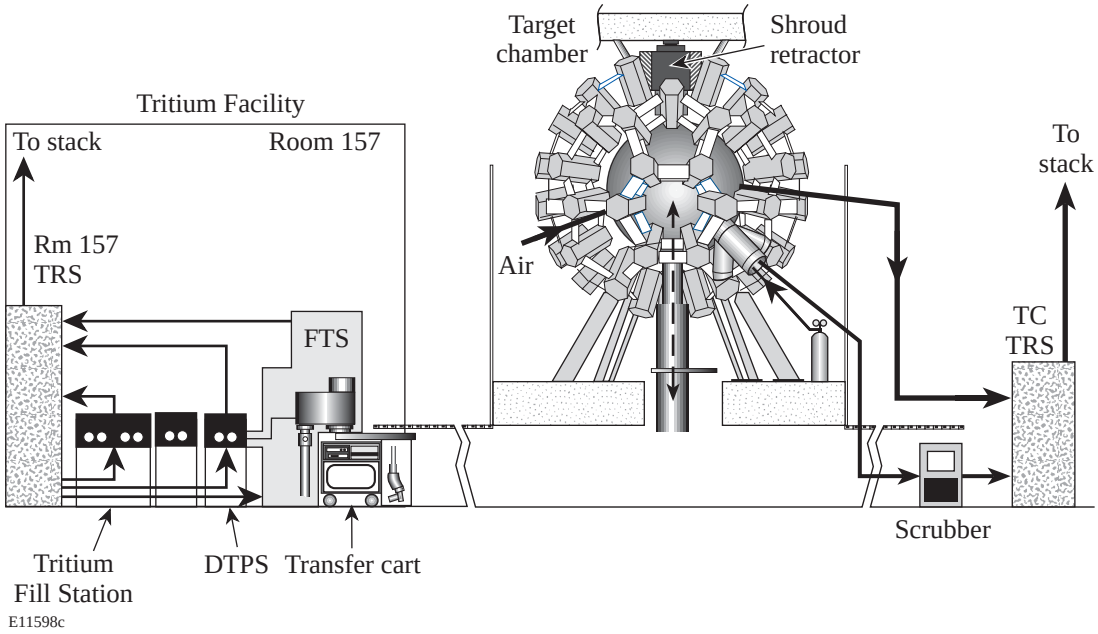

Figure 1.12-1
TRS integration.

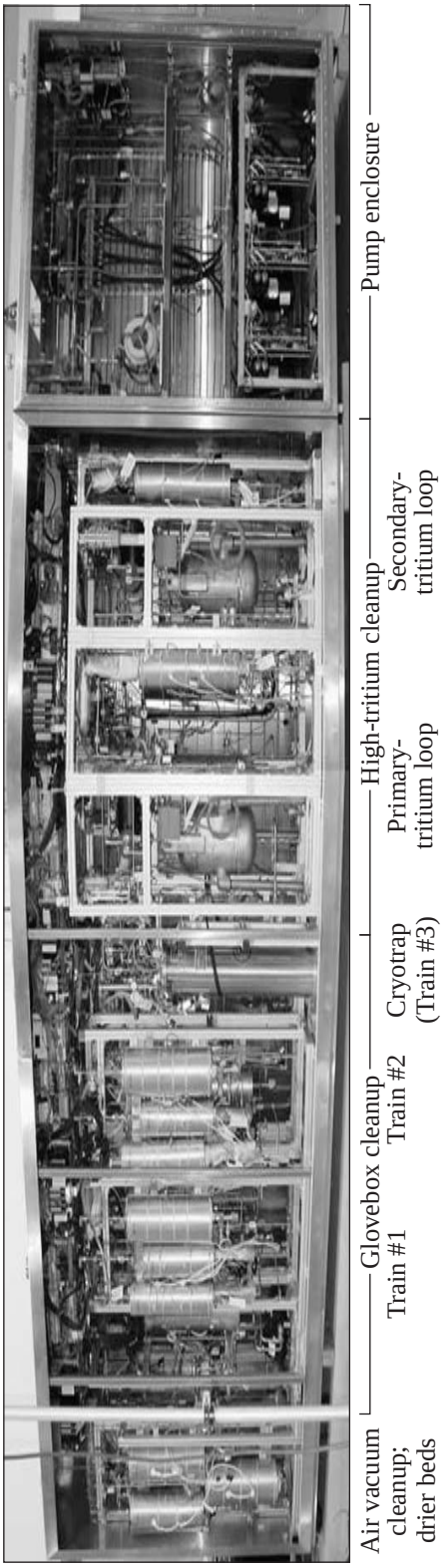

Figure 1.12-2
Room 157 Tritium Removal System.

The Target Chamber Tritium Removal System (TC-TRS) (Fig. 1.12-3)—removes tritium from the OMEGA target chamber exhaust streams. Shots involving room-temperature DT targets release approximately 20 mCi, and cryogenic targets release approximately 400 mCi. The TC-TRS provides the tritium-handling capability needed to deal with this significant increase and allows cryogenic DT operations to be conducted on a routine basis. This system is described in more detail in the OMEGA description Vol. I, Chap. 12.

The objective of tritium removal systems is to minimize airborne tritium effluent releases to well below the permit limit of 2.2 curie (Ci) * per year per exhaust stack. In addition, the system is designed to minimize tritium exposure to staff by maintaining low levels of tritium in the CTHS equipment.

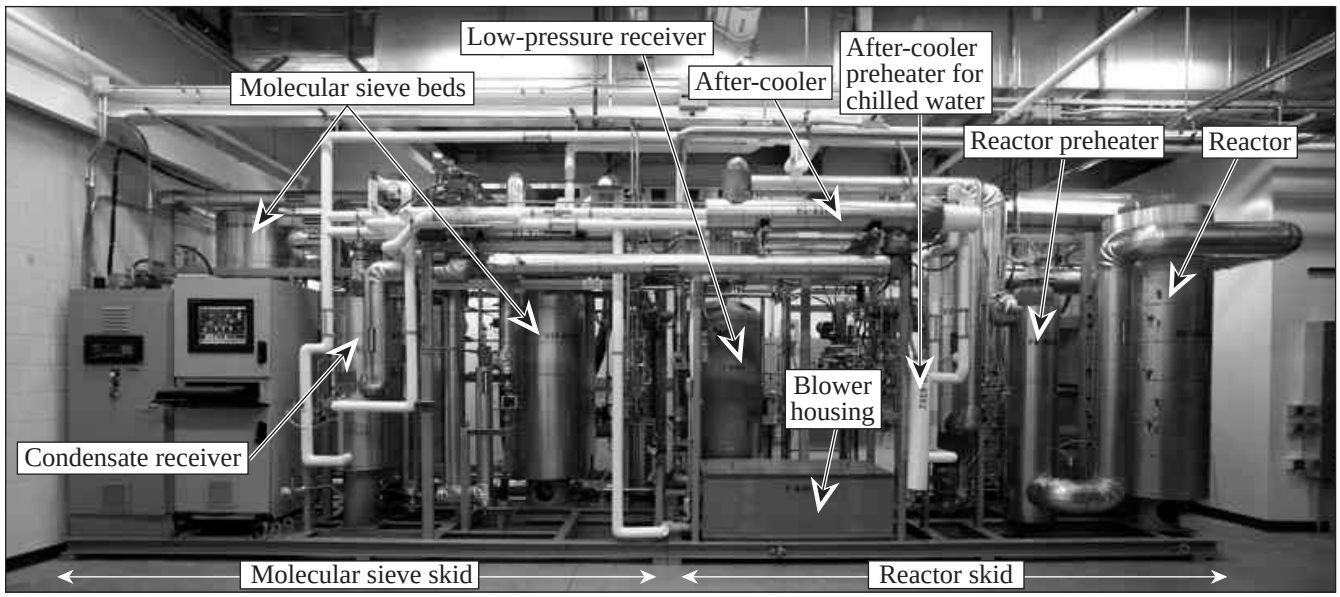

G6264

Figure 1.12.-3
TC-TRS.

(*1 g of tritium gas = 9619 Ci.)

1.13 CONTROLS

Safety during the high-pressure DT fill is achieved through the combination of personnel training, procedures, containment systems, monitoring, and a sequence of seven "fill states." The control system transitions to the appropriate fill state as the DT fill progresses and the defined permissives are met. Upon entering each fill state, certain required devices are enabled. Devices that are not required are disabled at each transition. This interlocking ensures that the operator keeps the process within the boundaries of the fill state. Figure 1.13-1 provides an overview of this concept. The fill state reflects the tritium location, pressure, and temperature.

Within each fill state, a sequence of manual operations and/or manually initiated automated sequences are executed. An operation is defined as a series of steps that achieves an objective within a fill state. The operator will be allowed to "pause" the process to correct or work around problems and can activate the appropriate "Stop" at any time.

The release scenario module (Fig. 1.13-1) monitors the process integrity and containment; if the containment system is compromised or a release is detected, the approriate stop (or pause) command for the current fill state is executed. The controls are defined in more detail in Chap. 13.

1.14 CTHS PROCESS OVERVIEW

This section provides an overview of the CTHS fill process.

1.14.1 Loading Targets into the FTS

The fill process begins by loading the empty-shelled targets into the target rack. The target rack is then loaded into the cryostat by means of the inserter mechanism. A target rack containing four targets is placed within the inserter (Fig. 1.14-1). The inserter transports targets vertically from underneath the cryostat up into the cryostat interior and into the permeation cell. The bottom of the target rack engages with a mating breech lock on the bottom of the permeation cell and is locked in place by the action of the inserter. This seals the permeation cell, forming a vessel that can withstand 1500 atm.

1.14.2 Charging the DTHPS with Tritium

For DT fills, the tritium inventory is released by heating the U-bed to 430˚C, condensed into the TFS condensation cell, and then expanded into the TFS assay volume. DT in the TFS assay volume is then condensed (cryo-pumped) to the DTHPS condensation tube.

For D_2 fills, the desired amount of gas (from a tank) is transferred to the assay volume and then condensed (cryo-pumped) onto the DTHPS condensation tube.

Figure 1.13-1
Fill-state sequence overview.

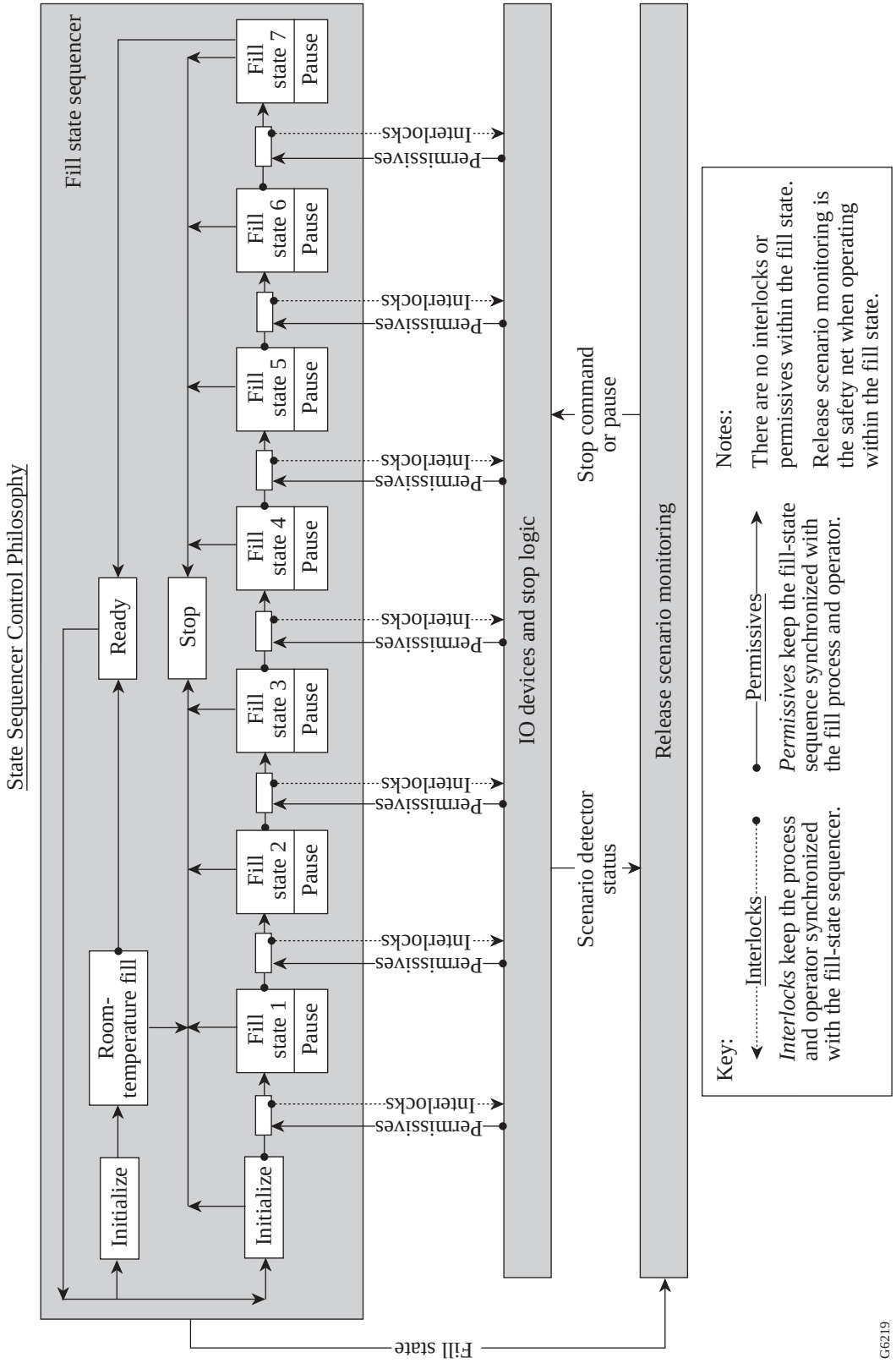

Figure 1.14-1
Overview of the integration of the TFS, DTHPS, FTS, and MCTC.

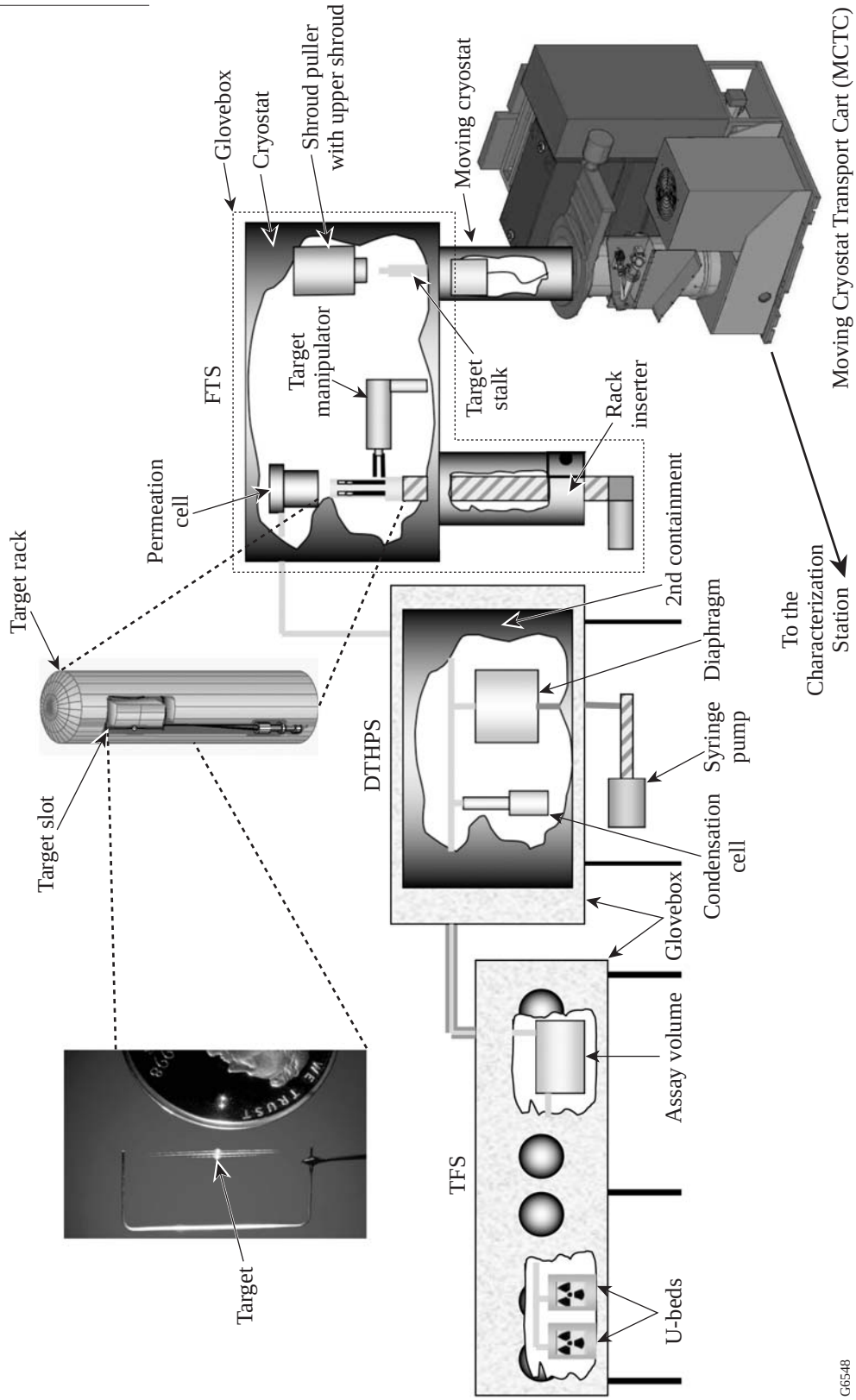

1.14.3 Pressurizing the Targets

The targets are pressurized in two stages: In the first stage, the condensation tube is slowly heated until the pressure in the targets reaches ~150 atm (190 atm maximum). The second stage of compression is achieved by slowly driving the diaphragm compressor to the final pressure, typically 1000 atm (1500 atm maximum). This compressor has a flexible metal diaphragm with up to 30.9 cm^3 of gas on one side and hydraulic oil on the other. The gas is compressed by using an oil syringe pump to move the diaphragm.

1.14.4 Cooling the Targets

After the targets have reached the maximum pressure, the permeation cell is slowly cooled to <25 K. The cooling must be slow enough that the cooled portion of the pressurization system remains isothermal, avoiding temperature gradients that could produce a pressure differential across the target wall, causing the target to burst or buckle.

1.14.5 Transferring the Targets to the MCTC

When the target cooling cycle has been completed, the unused tritium in the permeation cell is returned to the TFS U-bed and the MCTC is docked at the FTS. The MCTC connects to the FTS directly underneath the stalk aligner via a 16-in. gate valve and bellows seal (the interspace). The interspace is then evacuated and the 16-in. gate valve is opened; the moving cryostat is extended upward into the FTS interior. The shroud puller removes the upper shroud, exposing the stalk. A stalk aligner positions the stalk for target placement and blocks heat from entering the FTS cryostat.

The target rack is then lowered and exposed to the cryostat interior. Individual targets are removed from the exposed target rack using the target manipulator, a three-axis (z, r, q) robotic arm. The target manipulator can rotate in a horizontal plane, spanning a 130° arc to the MC stalk-loading position. The target manipulator places the filled target into the stalk. The stalk aligner is then opened and the upper shroud is replaced. The MC is then lowered into the MCTC and the gate valve is closed.

1.14.6 Layering the Targets

The MCTC is then moved and docked to the Characterization Station, where it is layered (Fig. 1.14-2). The process that produces a layered target consists of two steps: (1) determination of the equipment settings that will cause the fuel to be at its triple-point temperature and (2) crystal formation and layering.

Determining the layering-sphere temperature setting required for a given target to achieve the triple point is a time-consuming process. The Triple Point Automation (TPA) software module automates the data acquisition process for triple-point determination. An operator activates this module after entering the operating parameters. TPA changes the Lakeshore temperature setpoint in steps and allows it to soak a determined amount of time at the new temperature before acquiring an image and the associated process data.

When the cycle has been completed, these images are reviewed to determine the process setting required to achieve the triple-point temperature. The target is then brought to the triple-point temperature and the ice layer is allowed to form gradually.

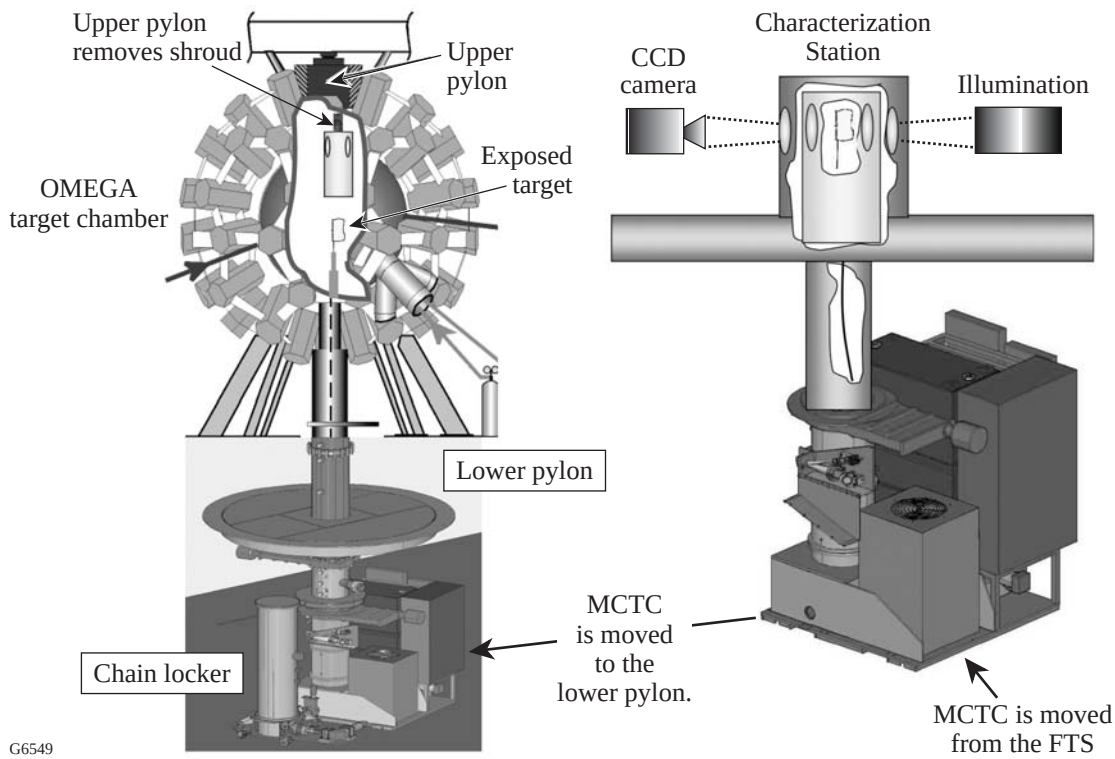

Figure 1.14-2
Overview of the CS, LP, UP, and MCTC process.

1.14.7 Characterizing the Targets

Images for three-dimensional (3-D) characterization are acquired by the Target Rotation and Image Acquisition System (TRIAS): TRIAS rotates the target (θ), centers the target, and acquires images at various θ positions. The series of images is then analyzed by the 3-D analysis package Matlab, an application that provides 3-D images of the target as well as an analysis of the layer quality along multiple axes. Accurate 3-D reconstructions and detection of isolated features require many segment images. The 3-D analysis smoothes the data from each segment image and then maps the data onto a sphere as shown in Fig. 1.14-3. The information for the low-order modes is then calculated and reported.

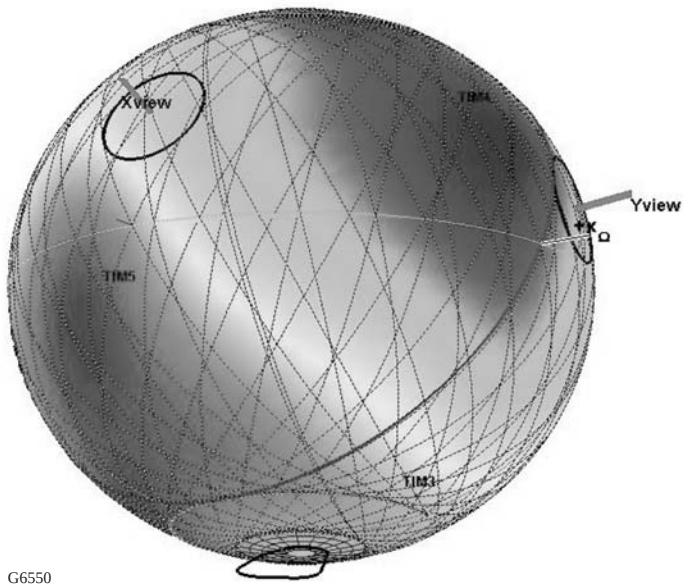

Figure 1.14-3
3-D characterization of a cryogenic target.

1.14.8 Placing the Target at the OMEGA Target Chamber Center

After the target is layered and characterized, the MCTC is moved to LaCave where it is docked to the lower pylon. The cart, the lower pylon, and the chain guide tube are pumped down and when equalized to the target chamber vacuum, the isolation gate valves are opened, and the MC is driven to TCC by the action of the chain being driven out of the locker and along guide rails inside the transport cart and lower pylon vacuum vessels. The umbilical spooler pays out the electrical and fluid lines that connect the MC to the cart, allowing the MC to extend 20 ft above the cart into the target chamber center.

When the MC arrives at the TCC (see Fig. 1.8-1), the MC mates with the kinematic dock built into the lower surface of the top of the lower pylon and is clamped into place. This places the layering sphere and target within approximately 100 μm of the convergence point of the laser beams.

The Target Auto Positioning Software (TAPS) obtains images from the Target Viewing System and calculates the position of a spherical target. TAPS then sends commands to the target positioner and moves the target to the position specified by the reticle in use.

1.14.9 Shot Sequence

When the entire OMEGA system is ready, the power amplifiers are charged. This takes about 2.5 min. After charging is complete, the precision timing sequence starts at T–20 s. During this last 20 s, a “pre-pull” activity prepares the shroud for removal, and the signal that causes the linear induction motor (LIM) to remove the shroud is issued at the correct time relative to the laser shot. The LIM pulls the upper shroud rapidly upward, exposing the cryogenic target to the laser beams.

The equipment implements safeguards to ensure that the CTHS equipment has sequenced correctly and that the target is still in place after the shroud is clear of the beams. If the target is not in place, the seed pulse from the laser drivers is interrupted to prevent energy from propagating. After a shot, the MCTC is returned to Room 157 and docked at the FTS where the shot target stalk is removed.