OMEGA EP System Operations Manual Volume VII–System Description

Chapter 1: System Overview

1.0 Introduction 1

1.1 Scientific Mission 1
1.1.1 High-Power, High-Energy, and Proton-Beam Radiography 3
1.1.2 HED Backlighting Experiments 4
1.1.2.1 Cryogenic Implosion Fuel Conditions 4
1.1.2.2 High-Temperature Opacity Measurements 5
1.1.3 Fast Ignition 5
1.1.3.1 Background 5
1.1.3.2 OMEGA EP Fast-Ignition Program 6
1.1.3.2.1 Intensity Scaling of Hot-Electron Energy 6
1.1.3.2.2 Electron-Beam Transport 6
1.1.4 SSP-Related High-Energy-Density Physics 6
1.1.4.1 Equation of State Measurements of Materials 7
1.1.4.2 Isentropic Compression 8
1.1.4.3 Isochoric Heating Experiments 8
1.1.4.4 Hydrodynamic Instability Experiments 8
1.1.4.5 Indirect-Drive Experiments 9

1.2 SYSTEM CONFIGURATION 9

1.3 SYSTEM PERFORMANCE SPECIFICATIONS 12
1.3.1 Short-Pulse Performance 12
1.3.2 Long-Pulse Performance 13

1.4 Laser Sources Subsystem 14
1.4.1 Laser Sources 1 and 2 14
1.4.2 Laser Sources 3 and 4 16
1.5 Laser Beamline Configuration 16
1.5.1 Beam Transport 18
1.5.2 Grating Compressor Chamber 20
1.5.3 Target Chamber and Target Area Structure 23
1.6 Timing Systems 24
1.7 Optical Alignment 26
1.8 Laser Diagnostics 29
1.8.1 Infrared Diagnostic Package (IRDP) 29
1.8.2 Short-Pulse Diagnostics Package (SPDP) 29
1.8.3 Ultraviolet Diagnostic Package (UVDP) 30
1.8.4 Full-Aperture Calorimetry 30
1.9 Control System and Joint Operations Plan 31
1.9.1 OMEGA EP Control Room 32
1.9.2 Shot Types and Closed Access 33
1.9.3 Shot Request Forms 35

Appendix A: Glossary of Acronyms

Chapter 1
System Overview

1.0 INTRODUCTION

This chapter provides an overview of the OMEGA EP Laser System. The scientific mission of the laser is described in Sec. 1.1. Section 1.2 provides an overview of the system configuration, and Sec. 1.3 provides a summary of the system specifications and laser energy requirements to meet the scientific mission. Sections 1.4 and 1.5 describe the laser-sources and beamline configuration, including the grating compressor and target chambers. Sections 1.6 and 1.7 describe the timing and optical alignment of the system. Section 1.8 describes the laser diagnostics used to characterize the beams and Sec. 1.9 describes the control system and the operations plan.

1.1 SCIENTIFIC MISSION

The primary experimental configurations possible using the four OMEGA EP beams are summarized in Table 1.1. Two short-pulse beams can be co-propagated to either the OMEGA or OMEGA EP target chambers for backlighting or fast-ignition experiments. Alternatively on OMEGA EP, the short pulse beams can be propagated orthogonally for backlighting and sidelighting. Compressed pulses from the upper of two pulse compressors may be propagated at full energy (2.6 kJ) with pulse widths as short as 10 ps. *B*-integral constraints limit the pulse-width/pulse-energy trade-off of the pulse emerging from the lower pulse compressor except when used for sidelighting applications in the OMEGA EP target chamber. Alternatively, all four beams may be directed into the OMEGA EP chamber, with each beam capable of being operated in long-pulse (UV) mode with independent temporal-pulse shapes and pulse widths up to 10 ns. It is also possible to send two compressed pulses and two frequency-converted pulses into the OMEGA EP target chamber on the same shot.

Five primary applications of the OMEGA EP laser beams that take advantage of this flexibility are summarized below. Two applications of the OMEGA EP beams to the current OMEGA Facility are described first, followed by three classes of experiments to be carried out in the OMEGA EP target chamber. When all 60 beams of OMEGA are used to generate a symmetric implosion, the only way to provide backlighting is to add additional beams to the system. The short-pulse, high-energy beams of OMEGA EP are capable of backlighting implosions with sufficient brightness to overcome target self-emission and are of a short enough duration to overcome motional blurring.

(a) Short-pulse backlighting in the existing OMEGA target chamber

One or both of the compressed beams can be used to backlight targets in the OMEGA target chamber with pulse-durations from 1 to 100 ps. As described in more detail in Sec. 1.1.1, high-intensity, short-pulse lasers generate significant fluxes of high-energy x rays (>15 keV to ~1 MeV) and energetic protons. Using the compressed beams as backlighters significantly enhances the options available and allows a wider range of high-energy-density (HED) physics experiments to be performed on OMEGA than previously possible. High-brightness backlighting sources with greatly improved temporal resolution allow spherical inertial confinement fusion (ICF) implosions to be backlit. The two high-energy petawatt

Table 1.1: Possible configurations for the four OMEGA EP beams in compressed (short) pulse or long-pulse applications. Pulse-width limitations result from design choices or by the *B*-integral of the beam combiner optic at the end of the pulse compressor.

		Co-propagating beams		
Beam path	Compressor[§]	OMEGA	OMEGA EP	OMEGA EP
Compression	Upper	1 to 100 ps	Backlighter port 1 to 100 ps	Backlighter port 1 to 100 ps
	Lower	20* to 100 ps	Backlighter port 20* to 100 ps	Sidelighter port 1 to 100 ps
Beamline				
Frequency conversion 1ω to 3ω	1			23° port (1 to 10 ns) 48° port (future)
	2			23° port (1 to 10 ns) 48° port (future)
	3			23° port (1 to 10 ns) 48° port (future)
	4			23° port (1 to 10 ns) 48° port (future)

[§]Beamline 1 or 2 into either pulse compressor.
*Beams in the lower compressor are limited in energy or pulse width by the B-integral of a beam combiner optic: a 20-ps pulse width is typical for most applications.

beams copropagate into the OMEGA target chamber but can be pointed and focused to different locations within ~1 mm.

(b) **Fast-ignition studies in the existing 60-beam OMEGA target chamber**

The two compressed beams will be transported to the existing OMEGA target chamber as coaxial beams with a common focus. The first beam will be used to make a channel in the plasma atmosphere surrounding the target through which the second (~5- to ~20-ps ignitor) beam, will propagate to the high-density region in the target before depositing its energy, via energetic electrons, in the compressed core, heating the plasma and increasing the fusion yield. Using the OMEGA EP beams, LLE will be uniquely able to study aspects of the fast-ignition approach to ICF because of the high areal densities and high electrical conductivity of compressed DT available with OMEGA's cryogenic capability. Recent work has shown that the fast-electron beam integrity in high-intensity laser–target interactions of the target improves with increased electrical conductivity. No experiment to date has a target with conductivity within an order of magnitude of that of a DT plasma. Fast ignition could increase the utility of compression facilities for inertial fusion energy (IFE) research. Research activities will be

focused on integrated experiments and developing an improved understanding of physics issues related to fast ignition (such as the laser-to-electron coupling efficiency and electron-beam propagation in high-conductivity plasmas), benchmarking theoretical models and defining the requirements for full-scale fast ignition on the NIF. A deliverable of this research is to observe significant ion heating (more than one thousand electron volts) and the concomitant increased neutron production in integrated fast-ignition experiments on OMEGA.

(c) **Long-pulse experiments in the OMEGA EP target chamber**

When operated in long-pulse mode, the four beams will be used primarily for planar-target experiments in OMEGA EP's baseline configuration. The long-pulse beams are frequency converted from 1ω to 3ω to improve their coupling efficiency to the target. Frequency conversion occurs before final transport to eliminate unconverted light before the beams enter the chamber. They are arrayed at near-normal incidence (23º). It will be possible to extend current OMEGA HED experiments to higher laser energies and longer pulse lengths. Alternatively, one or two of the beams can be used in compressed-pulse mode to produce short bursts of hard x rays and/or energetic protons for diagnosing targets driven by the long-pulse beams. These beams can radiograph targets along and/or perpendicular to target normal. The OMEGA EP chamber could eventually accommodate experiments in the indirect-drive configuration with half-hohlraums (hohlraums illuminated from one side), using up to four beams of variable pulse lengths. For this purpose, the outer cone of beam ports at 48º relative to the hohlraum axis allow the beams to be incident at an optimum angle for coupling to the hohlraum walls. The 48º beam cone and options such as frequency converting the beams to 2ω provide additional experimental flexibility. Only the 23º UV beams are included in the OMEGA EP baseline design.

(d) **Fast-ignition relevant experiments in the OMEGA EP target chamber**

The OMEGA EP configuration will permit experiments using various combinations of short- and long-pulse laser beams to be carried out in the new target chamber, allowing many aspects of high-intensity and HED physics to be studied. One or two of the new beams will be compressed and will interact with solid targets or with plasmas produced by two or three long-pulse beams. This will allow studies of laser and electron beam propagation in plasmas with ignition-scale conductivities. OMEGA EP is designed to support planar cryogenic target experiments using the OMEGA planar cryogenic target positioner (not in the baseline).

(e) **High-intensity laser–matter interaction experiments in the OMEGA EP target chamber**

The compressed petawatt laser beam can be propagated into the OMEGA EP target chamber, allowing high-intensity laser–matter interaction experiments with intensities in excess of 10^{20} W/cm^2.

1.1.1 High-Power, High-Energy, and Proton-Beam Radiography

The probing of high-energy-density (HED) matter with penetrating x rays or energetic particles has evolved over the last two decades as the principal technique for measuring the evolution of HED targets. A large fraction of the HED physics experiments on OMEGA (and on Nova prior to its shutdown) use drive beams to illuminate a backlighting target, producing x rays to radiograph the primary target. Thousands of HED backlighting experiments have been performed in the last decade on these and other facilities, despite the absence of dedicated backlighting laser beams.

The conventional laser beams on OMEGA and the NIF produce relatively low peak power and thus suffer several limitations for radiography applications. The primary limitations that are ameliorated using high-power, short-pulse, high-energy backlighter laser beams such as those available from OMEGA EP are

(a) The x-ray backlighter power is low. This results in an inability to make the backlighter brighter than some of the HED physics targets that are at high temperatures themselves and therefore emitting copious amounts of x rays.

(b) The x-ray photon energies are below ~15 keV, limiting the target thickness or atomic number that can be radiographed.

(c) The x rays are emitted for the relatively long duration of the laser pulse. This limits the time resolution Δt and, thus, the image quality that can be achieved. It also impacts the spatial resolution Δx because of motional smearing (given by $\Delta x = v\ \Delta t$ for material that is moving at velocity v).

(d) Few high-energy protons are produced, limiting the possibility of measuring material properties other than the x-ray opacity. The ionization state and electromagnetic fields could be measured with energetic protons.

OMEGA EP will overcome the limitations of backlighting with conventional OMEGA and NIF beams. It will allow dedicated backlighting beams in both the OMEGA and OMEGA EP target chambers. The short-pulse capability of illuminating targets at 10^{20} W/cm^2 and above allows new regimes of backlighting and the use of dedicated backlighting beams avoids compromising the symmetry of implosion experiments on OMEGA.

OMEGA EP will have essentially the same high energy petawatt (HEPW) beam configuration envisioned for implementation on the NIF advanced radiographic capability (ARC) machine. This will allow scientists to develop backlighting techniques for use on the NIF by exploiting OMEGA EP's higher shot rate and lower shot cost.

1.1.2 HED Backlighting Experiments

OMEGA EP's enhanced backlighting capabilities will be used for many different experiments. Examples are described in the following subsections.

1.1.2.1 Cryogenic Implosion Fuel Conditions

The HEPW beams from OMEGA EP backlight OMEGA cryogenic target implosions. The backlighter must provide sufficient brightness to overcome the implosion self-emission and produce an image that can be used to infer the density distribution of the hot core with a high signal-to-noise ratio. Using both of the OMEGA EP short-pulse-capable beamlines, it is possible to irradiate a 50-μm-radius Si backlighting target at an intensity of 5×10^{17} W/cm^2 using 20-ps pulses. Assuming an efficiency of 2×10^{-5}, this provides ~16 mJ/eV into 4π, which should be sufficient to produce a useful image.

1.1.2.2 High-Temperature Opacity Measurements

A major application of HED facilities is to measure the opacity of high-temperature materials. The backlighter brightness needs to exceed that of the high-temperature target. The backlighter spectrum should also be sufficiently flat to remove any ambiguities between backlighter and target spectral features. On OMEGA EP, radiation temperatures significantly higher than those achieved on OMEGA would be expected from a 2-kJ, 20-ps beam focused into a small hohlraum. This would be adequate for developing opacity experiments and the techniques needed for NIF backlighting, as well as performing opacity measurements on OMEGA.

1.1.3 Fast Ignition

1.1.3.1 Background

Indirect-drive, hot-spot ignition is the baseline approach to achieving ignition and gain on the NIF, and direct-drive, hot-spot ignition is the main alternative. Fast ignition coupled to a direct-drive or indirect-drive implosion is a third approach of significant current interest since it can potentially increase the target gain or reduce the ignition laser energy requirements. In the fast-ignition concept, the high-energy driver is used only to compress the fuel without creating a central hot spot. A burning hot spot is then formed by the rapid deposition of energy into the main fuel. Separation of the formation of the hot spot from the compression of the main fuel could, if there are no unexpected physics issues, reduce the energy requirement of the driver.

Fast ignition would make high-gain applications with drivers that have less energy than the full NIF (but more than OMEGA) possible and may relax requirements on efficiency and drive symmetry. Fast ignition can also be used with drivers such as ion-beam or *Z*-pinch radiation sources that can compress thermonuclear fuel to a high density. The science of fast ignition is more complex and less mature than central hot-spot ignition, so experimental tests under plasma conditions close to fast-ignition conditions are crucial. OMEGA EP will be the best-suited facility to perform the most important fast-ignition experiments because of OMEGA's unique ability to compress cryogenic targets.

For ignition, the energy E required to be deposited by a fast-ignition beam is $E = 140\ (100/\rho)^{1.8}$ kJ, where ρ is the fuel density in g/cm^3. Consequently, fast ignition is unlikely to be achieved with OMEGA EP since the current estimate is that ~100 kJ in 10 ps is required in the high-intensity beams. The main uncertainty in this estimate is the coupling of absorbed laser energy to the compressed core. The hot-electron temperature (the average particle energy) generated by the HEPW beam is readily estimated to be ~1 MeV for the electrons to be stopped efficiently in an areal density of a few hundred mg/cm^2, as required for hot-spot formation. This areal density is approximately equal to the range of alpha particles in the hot spot.

Hydrodynamic simulations have been used with considerable success to model "traditional" ICF implosions. Existing software codes, however, are inadequate for fast-ignition design, and more complex models, including physical phenomena that are, at present, poorly understood, need to be developed. It is currently believed that 3-D hybrid codes with particles for the fast electrons and fluids for the background are required and that magnetic-field generation and neutralizing reverse current will be important.

1.1.3.2 OMEGA EP Fast-Ignition Program

The key experiments needed to demonstrate the fast-ignition concept and determine the optimum parameters for the NIF will be carried out on OMEGA and OMEGA EP. The fundamental goal is to determine the coupling of the HEPW beam energy to the compressed core of a cryogenic implosion. Experiments will include the propagation of the high-intensity laser beam in the target, the conversion efficiency of the laser light to hot electrons (or ions), the intensity scaling of the hot-particle energy, the transport of these particles, and the heating of the compressed core.

1.1.3.2.1 Intensity Scaling of Hot-Electron Energy

The coupling efficiency to DT or plastic targets may be different than for high-Z targets and is a major uncertainty in the fast-ignition scheme. In addition, the relationship between the hot-electron temperature T_{hot} and the ponderomotive potential Φ_{pond} of the high-intensity beam appears to be a function of target Z. This will be determined experimentally in planar cryogenic target experiments in the OMEGA EP target chamber. The beam intensity will be varied by changing the compressed pulse duration in the 1- to 10-ps range.

1.1.3.2.2 Electron-Beam Transport

HEPW-generated electron-beam propagation without excessive divergence is important for fast ignition. For example, the compressed core on OMEGA is only ~80 μm in diameter and remains assembled for less than ~100 ps, dictating a tight specification on the pointing accuracy of the channeling and ignitor beams. At the same time, the critical-electron-density (n_c) contour for 1-μm light has a 430-μm radius while the 10 n_c contour has a 150-μm radius. From this approximate characterization of the radial density profile, it is clear that the propagation of the high-intensity beams through the overdense plasma region requires good collimation and directionality of the electron beam that is generated at the end of the laser propagation. Studies of these processes will be carried out in the OMEGA EP chamber followed by full-scale, integrated implosion experiments in the OMEGA chamber with the compressed OMEGA EP beams used as the channeling and ignitor beams. The cone-in-shell fast-ignitor concept will also be validated.

1.1.4 SSP-Related High-Energy-Density Physics

Areas of high-energy-density physics of interest to NNSA's Stockpile Stewardship Program (SSP) include (1) dynamic materials studies, including high-pressure equation-of-state (EOS) experiments of materials at high energy density, and (2) compressible hydrodynamics and radiative hydrodynamics experiments. The OMEGA EP target chamber design is optimal for both classes of experiments because all the laser energy is incident from one direction. The ability to heat compressed materials with high-intensity beams and the advanced radiographic capabilities are equally valuable.

A related area is the study of matter near and above solid density at temperatures that can vary from a few electron volts to several hundred electron volts. There are applications in planetary and earth sciences, in addition to ICF and HED physics, including studies of the EOS and other materials properties relevant to high-pressure planetary interiors. Challenges presented by this field include producing controlled conditions and their diagnosis. A number of complementary techniques can be used on OMEGA EP to access these conditions.

(a) A strong shock wave may be sent through a sample using the long-pulse UV beams. This method is extensively used for EOS experiments but it allows one to access points on the principal Hugoniot only.

(b) Isentropic (shockless) compression can be achieved with a carefully shaped pressure drive coupled to the appropriate target design. This method permits access to the high-density, low-temperature region of phase space that is of special relevance for geophysical and planetary science problems and the study of metallic hydrogen.

(c) The target may be heated isochorically by penetrating radiation, with little decompression, to access the solid-density, high-temperature, high-pressure region of phase space. The penetrating radiation can be hard x rays, fast electrons, or fast protons produced during the interaction of a short, high-intensity laser pulse with matter, or thermal conduction resulting from ultrafast-laser absorption in the plasma corona. This method allows the opacities of partially and fully degenerate matter (warm dense matter) to be studied.

1.1.4.1 Equation of State Measurements of Materials

Knowledge of the EOS of materials, including those used in above ground experiments (AGEX), is of paramount importance to the SSP. Many conditions of interest require shock waves driven at megabar pressures, and the EOS of materials at these pressures is often unknown.

The OMEGA EP system will significantly extend the range of conditions and materials that can be tested with OMEGA because of the higher laser-driver energy and the increased number of shots available. The OMEGA EP target chamber will be configured to accommodate a VISAR[1] (velocity interferometer system for any reflector) diagnostic to determine the EOS and will be compatible with the OMEGA planar cryogenic target positioner.

These experiments make use of the "impedance matching" method described in Zel'dovich and Raizer.[2] A reference material with a known EOS is placed next to a material of unknown EOS, and a shock wave is propagated from the former material to the latter. Measurements of the shock speeds through the two materials allow inference of the pressure and particle velocity in the material of unknown EOS.

EOS experiments on OMEGA EP will involve the use of all four UV beams to drive a package or three UV beams for the drive and one as a backlighter. There is interest in EOS data at pressures from kilobars to tens or hundreds of megabars, requiring intensities in the range of 10^{11} to 10^{16} W/cm^2. A nominal 1-mm-diam spot suffices for most of these experiments, but the extreme intensities require spots ranging from 0.5 to 3 mm in diameter. Drive pulses are typically square in time and range from 1 to 10 ns in duration. The packages have various types of shields (typically with a 10-mm diameter). The target thicknesses (ablator plus pusher plus sample) are of the order of a few hundred microns, and the individual component thicknesses are determined by the shock dynamics (rarefaction and reverberation) to produce steady and planar conditions in the sample. OMEGA EP will allow for the use of phase plates, although none are included in the baseline project.

[1]Note that VISAR is not a baseline diagnostic for OMEGA EP, but it could be implemented.

[2]Ya. B. Zel'dovich and Yu. P. Raizer, "Thermal Radiation and Radiant Heat Exchange in a Medium," in Physics of Shock Waves and High-Temperature Hydrodynamic Phenomena, edited by W. D. Hayes and R. F. Probstein (Academic Press, New York, 1966), Chap. II, Vol. I, pp. 107–175.

In addition to the VISAR diagnostic that views the target along its rear axis (normal), a backlighter target (>10 mm to the side) produces x-rays that radiograph the target side-on. An x-ray streak camera (opposing the backlighter) detects these x-rays to view the motion of the pusher. For thick packages, the shock continues to propagate for many nanoseconds after the laser pulse has ended. OMEGA EP includes orthogonal viewing angles.

1.1.4.2 Isentropic Compression

Isentropic (shockless) compression will be used to reach the high-density, low-temperature region of phase space that is of special relevance for geophysical and planetary science problems and for the study of metallic hydrogen. To maintain the desired low temperature of the sample, a long, carefully shaped pressure drive is required. With the long pulse duration, high energy, and individual pulse shaping and timing available for each of the OMEGA EP beams, it will be possible to provide samples in a new and unexplored temperature and density range.

1.1.4.3 Isochoric Heating Experiments

Fast electrons or protons generated by an ultrashort laser pulse can be used to isochorically heat samples at solid density, high temperature, and high pressure. Generally, the pulse duration of the fast electrons produced in the interaction of a high-intensity short-pulse laser with matter is close to the laser pulse duration. At relativistic intensities I such that $I\lambda^2 > 10^{18}$ W/cm^2, where λ is the laser wavelength in microns, the electrons are emitted into a cone with a half-angle <40° in the forward direction, and the effective temperature of the electrons is, to a good approximation, proportional to the laser intensity ($T_{\text{hot}} \propto I\lambda^2$). The short-pulse duration of <10 ps minimizes the hydrodynamic expansion of the sample and makes the heating close to isochoric. It will be possible to study the opacities of warm, dense matter using diagnostic techniques such as absorption spectroscopy with a spectrally broad backlighter produced by the second short-pulse beam.

1.1.4.4 Hydrodynamic Instability Experiments

The nonlinear evolution of Rayleigh–Taylor and other hydrodynamic instabilities remains an important SSP problem. A quantitative description of the evolution of the bubbles and spikes in the highly nonlinear phase of implosions is essential. To address this issue, an embedded-interface, Rayleigh–Taylor test bed that has linear growth factors in excess of 1000 is being developed for OMEGA. On OMEGA EP, the higher energy and longer pulses available to accelerate a planar package will extend these experiments to still larger growth factors, allowing the highly nonlinear development of the instability at the embedded interface to be studied. In particular, the nonlinear mixing and the bubble-and-spike growth characteristics will be studied for both single-mode and multimode perturbations.

The evolution of Rayleigh–Taylor instability at an interface can be studied either by accelerating a target with the laser ablation of material or by decelerating a target in a background medium. This research has been started on the OMEGA Laser System with a focus on experiments using a decelerating target. No correction for ablation is needed with a decelerating foil, and the growth can be calculated with the classical formula.

Both large-area backlighting and point-projection backlighting are possible. Large-area backlighting needs several kilojoules of laser energy at a pulse length of ~1 ns to illuminate the large-area x-ray source. The backlighter needs to be independently timed, with delays from ~0.3 to 100 ns relative to the drive beam. Point-projection backlighting is more energy efficient and needs only ~500 J,

but requires the short-pulse duration of <100 ps available on OMEGA EP. Alternative experimental configurations producing 2ω or 3ω beams are available design options.

1.1.4.5 Indirect-Drive Experiments

OMEGA EP will have the capability of irradiating targets with beams at 48° to the target normal even though it is not included in the baseline project. This is ideal for the irradiation of half-hohlraums with >20 kJ of laser energy in pulses up to 10 ns. While no specific experiments are yet designed, it is likely that this capability will be of significant interest to the national laboratories and will be developed when the facility becomes available for target physics experiments.

1.2 SYSTEM CONFIGURATION

The new laser facility is housed in a structure attached to the south side of the existing LLE building (see Fig. 1.1). The OMEGA EP target chamber is due east of the existing OMEGA target chamber. The most significant structural feature of the OMEGA EP Laser System is an 83-ft-wide, 263-ft-long, and one-story-high (14-ft) concrete box-beam, which serves as a rigid "optical table." The first and second floors of the structure serve as the optical table and are 30-in.-thick concrete slabs. The lower floor rests on a bed of compacted gravel and is structurally independent from the laboratory building that encloses it. This structural approach was based on the success of the original OMEGA facility design. It provides the high degree of vibration isolation that is necessary for precision laser operations. The area inside the box-beam on the lower level contains the Diagnostic Bays, the Sources Bay, and two Capacitor Bays, that house the power conditioning system that powers the laser amplifiers. The Sources and Laser Bays are climate controlled and designed to operate as Class-1000 clean rooms, but actually perform to nearly Class-100 conditions. A Control Room on the second floor is provided to the east of the Laser Bay with a viewing gallery at the north end of the Laser Bay.

Four laser beamlines (two short/long-pulse beams and two long-pulse beams), arranged horizontally across the floor, are located to the south of the grating compression chamber (GCC) and the target chamber and its supporting structure. Beams 1 and 2 may be temporally compressed to short-pulse IR beams in the GCC and then propagated into either target chamber. Alternatively, all four beams may be operated in long-pulse mode, frequency tripled, and directed into the OMEGA EP target chamber.

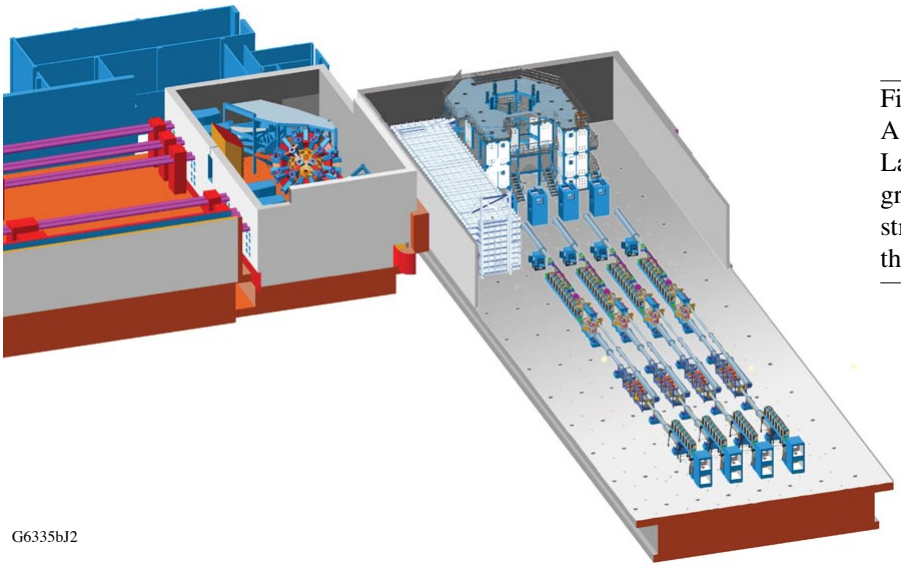

G6335bJ2

Figure 1.1
A simplified view of the OMEGA EP Laser Bay showing the four beamlines, grating compressor chamber, target area structure, and target chamber relative to the OMEGA Laser System.

A schematic diagram of the main components of a beamline is shown in Fig. 1.2. Each beamline is "folded" into two levels: an upper level that includes a 7-disk booster amplifier and transport spatial filter (TSF) and a lower level that forms a cavity between the cavity end mirror (CEM) to the south and the deformable mirror (DM). The cavity includes an 11-disk main amplifier, a cavity spatial filter (CSF), and a plasma electrode Pockels cell (PEPC). The DM corrects wavefront errors in the laser pulse that originate from optical aberrations in the optics or from prompt-induced distortion of the laser disks produced when the amplifiers fire. The PEPC is an electro-optical switch using polarization rotation to trap the laser pulse in the cavity, providing an additional pass through the main amplifier resulting in higher gain.

The seed laser pulse (generated in Laser Sources) is injected into the transport spatial filter via a periscope. For short-pulse experiments in either target chamber, the seed pulses of Beams 1 and 2 are generated using optical parametric chirped-pulse amplification (OPCPA). The injected pulse passes through the booster amplifier and is reflected off the fold mirror to the polarizer (POL1) and into the main amplifier. The pulse makes either one or two round-trips through the cavity to gain the required energy, then returns through the booster amplifier and TSF, and propagates to a switchyard. In the switchyard, the beam is directed into the GCC for temporal-pulse compression or to the frequency-conversion crystals (FCC's) for the generation of long-pulse UV beams. A second polarizer (POL2 of Fig. 1.2) is inserted between the PEPC and the CSF to prevent light reflected from the target from damaging the main amplifier. Details of its use are explained in Sec. 1.5.

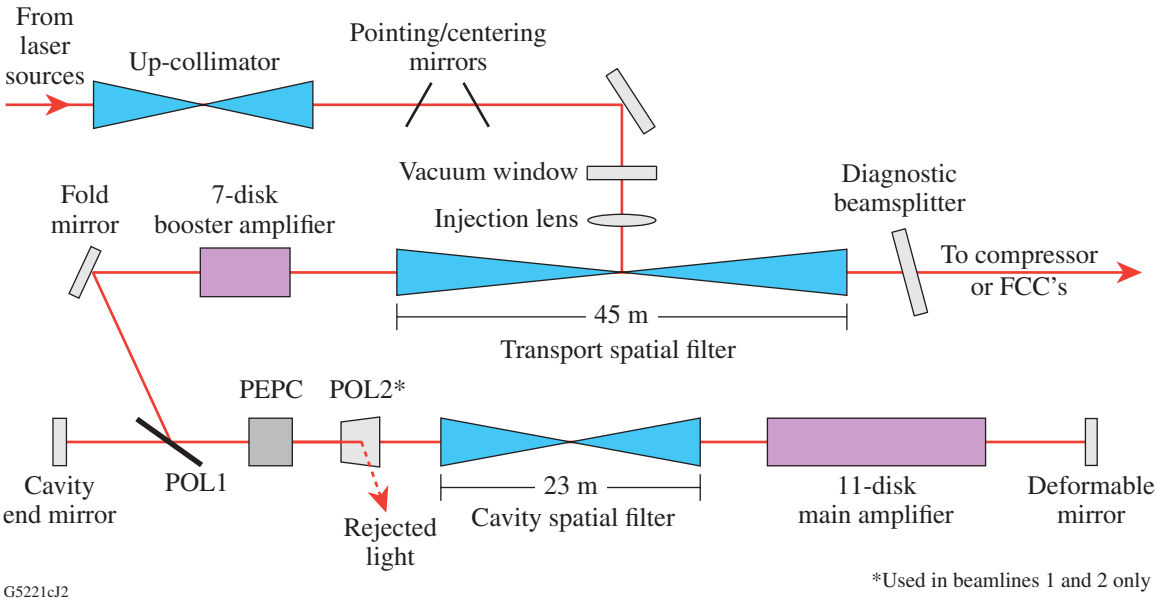

Figure 1.2
Optical components for the injection and amplification portions of an OMEGA EP beamline. Beamlines 3 and 4 do not have short-pulse capability and therefore do not require POL2.

Each temporally stretched pulse is compressed to the desired pulse width while maintaining beam size using a pulse compressor comprised of a quad of tiled multilayer dielectric diffraction (MLD) grating assemblies. The two pulse compressors are located in the GCC aligned atop one another, and the upper compressor is illustrated in Fig. 1.3. The principle of pulse compression is based upon the diffraction of light off the grating surface and the fact that different wavelengths of light travel different distances within the compressor before being recombined at Grating 4.

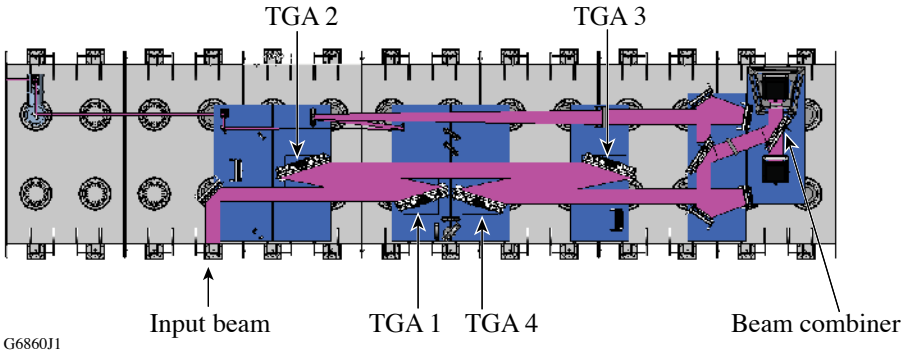

Figure 1.3
The upper of two four-grating pulse compressors is shown inside the GCC. The lower compressor is identical. The output of each compressor is directed to a beam combiner where the pulses are coaxially aligned. A target chamber selection mirror (not shown) diverts pulses to either target chamber. Alternatively, the two pulses can be used to simultaneously backlight and sidelight an OMEGA EP target.

After pulse compression, the beams can be directed to either the OMEGA or OMEGA EP target chamber. When the beams propagate to the OMEGA target chamber, they are coaxially aligned using a beam combining optic and a target chamber selection mirror directs them to the target chamber. They enter the chamber through diagnostic hex port (H9) and traverse the chamber to hex port (H7) where an off-axis *f*/1.8 parabolic mirror focuses them onto the target. The focal spot can be shifted to any location within 1 cm of the center of the chamber to provide for flexible backlighting geometries. The foci of the two beams may be separated by ~1 mm.

In OMEGA EP, two beam configurations are possible. In the first configuration, the beams propagate along the backlighter beam path, enter the target chamber through port 33, and are focused by an *f*/1.8 off-axis parabolic mirror in a nearly opposing port that focuses the beam onto the target. The beams may be coaxially aligned in this setup. In the second configuration, the two beams can propagate separately along the backlighter and sidelighter paths, entering the chamber through ports 33 and 69. They are similarly focused by a pair of *f*/1.8 off-axis parabolas on nearly opposing ports. The focal spots of these beams can be shifted to any location within 1 cm of target chamber center, providing for flexible experimental geometries and configurations. An illustration of the concept is shown in Fig. 1.4.

In long-pulse mode, all four beams are diverted in the switchyard to the frequency-conversion crystals, where they are frequency tripled to the UV (351 nm). UV high-reflector (HR) mirrors and a focus lens (FOA) deliver the beams to the target chamber at 23° relative to the target normal. These UV-only mirrors also serve to separate unconverted IR and second-harmonic light before the beam enters the target chamber. A future option is to add a 48° beam path relative to target normal. The four (or eight) ports for the UV beams straddle the *f*/1.8 off-axis parabola for symmetric production of preformed plasma.

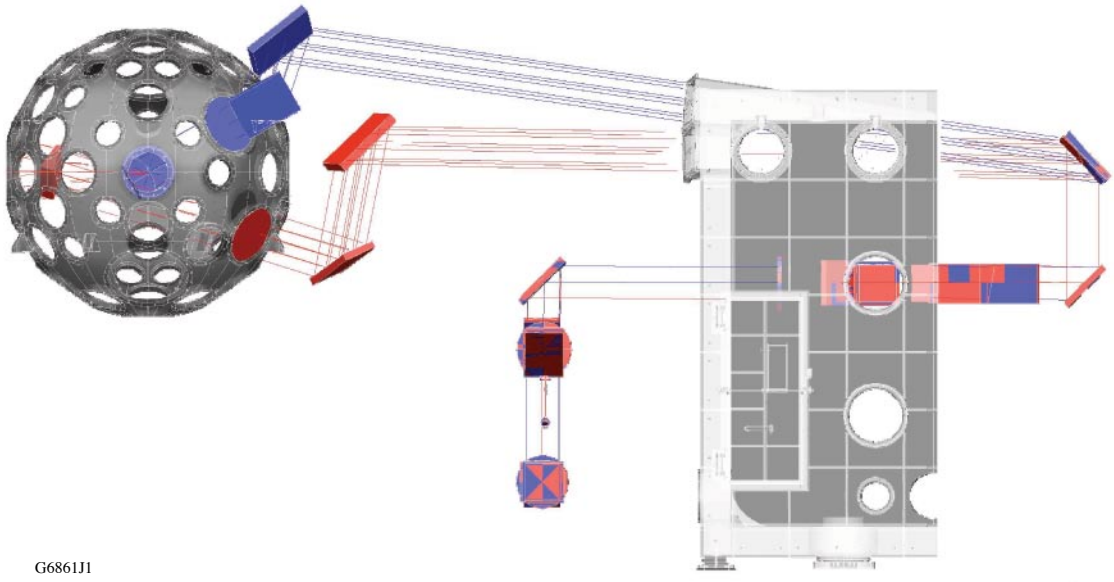

Figure 1.4
Cutaway illustration of the OMEGA EP target chamber (TC) and the GCC (partial view) looking south. The TC selection mirror (upper right) can be aligned to direct the temporally compressed beam to enter the backlighter port (blue) or sidelighter port (red). A related geometry enables simultaneous backlighting and sidelighting within the OMEGA EP chamber. The TC selection mirror may also be reoriented to direct the beam to the OMEGA TC (not shown).

The system is configurable so that Beamlines 1 and/or 2 may operate in short- or long-pulse mode while Beamlines 3 and/or 4 operate in long-pulse mode since each beamline has its own seed pulse. Beams 3 and 4 cannot be directed to the OMEGA target chamber.

1.3 SYSTEM PERFORMANCE SPECIFICATIONS

1.3.1 Short-Pulse Performance

The short-pulse beams are capable of compression to various pulse widths in the range of 1 to 100 ps. The top-level specifications for these beams are given in Table 1.2. Beam performance parameters are given for (1) the maximum on-target intensity, (2) the 10-ps fast ignitor, and (3) the copropagated channeling beam. For the baseline design, peak focused intensities of $>10^{19}$ W/cm^2 (using *f*/1.8 reflective optics) are available at the shortest pulse width. For short-pulse backlighting, the pulse width chosen will depend on the needs of the specific experiment.

The numbers quoted in Table 1.2 assume a system performance limited by the damage threshold of the multilayer dielectric reflection gratings. The use of improved grating technology provides up to ~2.6 kJ of laser energy per beam. The pulse width of Beam 2, when copropagating with Beam 1, is limited by the *B*-integral accumulated while it passes through the beam combiner in the grating compressor chamber, resulting in a maximum on-target intensity of $\sim 4 \times 10^{18}$ W/cm^2. For the normal operations, the pulse width should be ~35 ps to obtain the minimum focal spot size, but a 20-ps pulse is possible for experiments requiring a larger focal spot. The performance in short-pulse mode is strictly limited by the damage fluence of the MLD compression gratings. The laser itself, even at the relatively short output-

stretched pulse length of 1.13 ns, is capable of producing >4.0 kJ of energy at the input to the compressor. The final grating (G4) is critical as it sees the fully compressed pulse and will damage first.

Table 1.2: Specifications for the 1053-nm chirped-pulse-amplification beams. Note that the beams can be used for backlighting at all pulse widths from the minimum shown up to 100 ps. When Beam 2 is not copropagating with Beam 1, it has the same parameters as Beam 1.

	Beam 1		Beam 2
Baseline performance	Maximum intensity	Fast-ignitor beam	Channeling beam copropagated
Pulse width (ps)	1	10	100
Focal spot radius (μm)	10	10	20
Energy on target (kJ)	0.8	2.6	2.6
Intensity (W/cm^2)	$\sim 2 \times 10^{20}$	$\sim 6 \times 10^{19}$	$\sim 3 \times 10^{18}$[(a)]
[(a)]Limited by B-integral in beam combiner.			

1.3.2 Long-Pulse Performance

Anticipated performance parameters of the four long-pulse beams are given in Table 1.3. The UV on-target energies are derived from a conservative scenario in which the IR energy at each pulse width is limited to 80% of the NIF design value. To allow for possible inhomogeneities in the frequency-conversion crystals or alignment errors, the frequency-conversion efficiency is de-rated by 10% from the calculated value, and the transport from the frequency-conversion crystals to the target (including a 4% diagnostic pickoff) is conservatively assumed to be 85%. The calculations used for Table 1.3 assume low-risk, existing technologies and demonstrated UV damage fluences for optical coatings. In spite of the de-rating of OMEGA EP energies relative to NIF design values, the OMEGA EP performance requirement of 5 kJ/beam is met.

The performance of the laser chain for 1- and 10-ns square pulses is limited by the peak fluences and damage limits of the optical components in the OMEGA EP beamline after the last pass through the cavity, the booster-amplifier section, and the UV transport to target. The most damage-threatened components in the UV subsystem in both the 1-ns and 10-ns cases are the UV transport mirrors. Careful image relaying to the plane of the first UV transport mirror is necessary to ensure optimal system performance. The next most threatened UV component is the output surface of the FCC's. In the IR sections, the cavity polarizer in reflection is the most damage-threatened component. The limit at 10 ns corresponds to the maximum pulse width that can be produced by the current front-end sources design.

Table 1.3 also lists the UV energy potential of the system, assuming a modest increase in the current coating damage fluence. The long-pulse performance of OMEGA EP for pulses ≤1 ns is limited by the accumulated B-integral in the UV subsystem (which is held to ≤2). For pulse lengths longer than ~1 ns, the performance is limited by the damage fluence of current UV high-reflector coatings. This scales with Gaussian pulse width τ as 5.2 $\tau^{1/3}$ J/cm^2, with τ measured in nanoseconds.

Table 1.3: Performance parameters of the 351-nm long-pulse beams (quantities refer to a single beam). The "baseline" UV energies are what can be obtained with existing technology. The "potential" UV energies are possible with reasonable optical technology developments. The quoted intensities are averages over the focal spot and use the "baseline" UV energies.

Square pulse width (ns)	0.1	1.0	4.0	8.0	10.0
UV on-target energy (kJ):					
Baseline	0.25	2.5	3.7	4.5	5.0
Potential	0.25	2.5	4.8	6.0	6.5
Intensity (W/cm^2) for 1-mm spot diameter	3×10^{14}	3×10^{14}	1.2×10^{14}	7×10^{13}	6×10^{13}
Intensity (W/cm^2) for 100-μm spot diameter	3×10^{16}	3×10^{16}	1.2×10^{16}	7×10^{15}	6×10^{15}

1.4 LASER SOURCES SUBSYSTEM

The Laser Sources Bay is located between the north and south Capacitor Bays on the first floor of the facility. Each beamline in OMEGA EP has its own dedicated set of laser drivers, referred to as laser sources. Beamlines 1 and 2 have the capability to produce both short- or long-pulse seed pulses for their dedicated beamline. Thus, there are six independent laser sources.

1.4.1 Laser Sources 1 and 2

Different architectures are used for generating the long-pulse and short-pulse laser sources, as indicated schematically in Figs. 1.5 and 1.6. The long-pulse (LP) source is largely based on existing OMEGA technology with some modifications made to the regen to allow for 10-ns pulses. The short-pulse source is based on optical parametric chirped-pulse amplification (OPCPA) because existing long-pulse technology lacks the bandwidth needed.

The short-pulse beams start with a commercial Time Bandwidth Products mode-locked oscillator that produces pulses with an ~200-fs duration. These pulses are stretched to ~2.4 ns (FWHM) in an optical system that uses a diffraction grating to impose different delays on different frequency components. The resulting "chirped" beam is spatially shaped before being amplified using an optical parametric amplifier. This OPCPA stage is critical to the performance of the short-pulse beams. Attractive features of OPCPA include a broad gain bandwidth, high gain in a short optical path, and reduced amplified spontaneous emission. These are exploited to preserve the bandwidth of the signal beam and provide a gain of ~10^9.

Optical parametric amplification is a nonlinear optical process whereby energy is down-converted from a (pump) beam of higher frequency into two beams of lower frequency, known as the signal and idler beams. For OMEGA EP, the pump beam is a frequency-doubled, 527-nm-wavelength, Nd:YLF laser. LBO (lithium tri-borate) crystals are used as the parametric-amplification media. The signal beam is the input to the OPCPA stage, and the amplified signal beam is the output. The idler (1053 nm, like the signal) is generated in the LBO crystals and separated after the OPCPA stage. The sum of the (chirped)

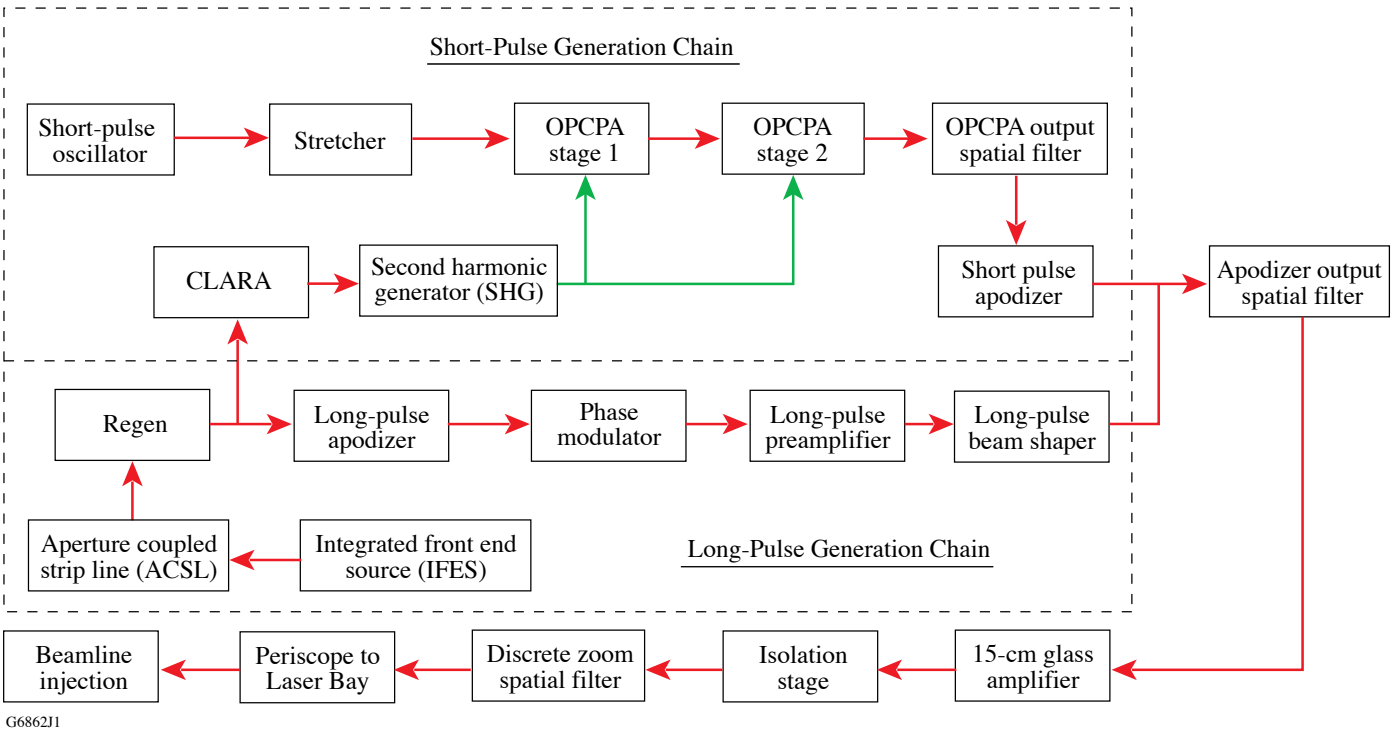

Figure 1.5
Schematic diagram of the Laser Sources subsystem design for sources 1 and 2. These sources support both short-pulse (1 to 100 ps) and long-pulse (1 to 10 ns) operation. The "green" coloration from the CLARA SHG indicates 2ω. Beamlines 3 and 4 do not have short-pulse capability and therefore have a different configuration.

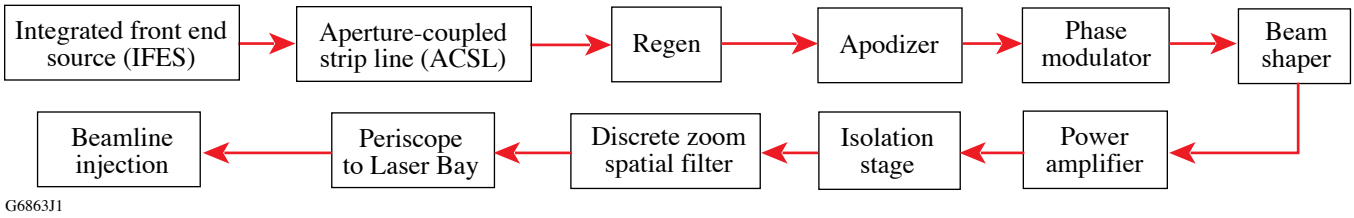

Figure 1.6
Block diagram of the Laser Sources Beamlines 3 and 4. These sources do not have short-pulse capability. Pulse lengths and shaping between 1 and 10 ns are provided. The regen in these systems limits the pulse width.

signal and idler frequencies equals the pump frequency for each temporal portion of the pulse. Optical parametric amplification is essentially the reverse of sum-frequency mixing, where two lower frequencies combine to form a higher frequency as in the frequency-conversion crystals, and is described by the same equations. OPCPA is a special case of optical parametric amplification where the signal beam is frequency chirped.

The OPCPA pump laser starts with the same components as the long-pulse beam up to and including the spatial shaping stage. It also includes a high-repetition-rate (5-Hz) crystal large aperture ring amplifier (CLARA) that amplifies the shaped IR pulse to ~3 J/pulse and a second harmonic generator (SHG) that produces ~2-J 2ω pulses that are square in space and time. The signal emerging from the OPCPA stage is further amplified using the same 15-cm Nd:glass amplifier that is used in long-pulse

mode. The output of the OPCPA stage can also be propagated through the main portion of the laser system to establish optical alignment, verify compressor performance, and align the beam transport and focusing systems.

The long-pulse mode of Sources 1 and 2 use the same technologies as Sources 3 and 4 described in Sec. 1.4.2 below.

1.4.2 Laser Sources 3 and 4

In long-pulse mode, the beam pulse lengths are adjustable between 1 and 10 ns. A schematic diagram of the system is shown in Fig. 1.6. The laser pulse originates from an integrated front-end source (IFES) that contains a commercial distributed feedback fiber laser (Koheras). The IFES produces a continuous wave output (1053.044 nm) that is subsequently shaped so that the desired on-target temporal profile will be generated after the nonlinear processes of amplification and frequency conversion. The pulse-shaping system uses either aperture-coupled strip line (ACSL) or arbitrary-waveform-generator (AWG) technology, depending on the pulse length and bandwidth requirements for a given experiment. The temporally shaped pulse is amplified in a regenerative amplifier that produces ~5-mJ laser pulses at 5 Hz. An apodizer is then used to shape the spatial profile of the beam from round to square, creating an optimized, on-target, UV spatial profile. Next, a small amount of frequency-modulation bandwidth is imposed to suppress stimulated Brillouin scattering that could otherwise threaten large optics such as the focus lenses. The bandwidth of 0.5 Å (~15 GHz) is applied at a modulation frequency of 3 GHz using a bulk microwave lithium niobate ($LiNBO_3$) modulator. The pulse is further amplified in a glass amplifier before injection into the transport spatial filter of the beamlines. The optical-image plane of the LP apodizer is relayed throughout the system. The output of the long-pulse front-end source is a spatially square, temporally shaped beam with a nearly flat wavefront.

1.5 LASER BEAMLINE CONFIGURATION

The optical components in the injection and amplification portions of one beamline are almost the same regardless of whether a long pulse or a short pulse is passing through. Referring to Fig. 1.2, the input laser beam (~280 mJ for long pulses and up to 5 J for short pulses) is injected by an injection mirror and color-corrected injection lenses into the TSF, where it expands to an ~37-cm-sq aperture. For short pulses, more of the system gain is placed at the front end of the system, where there is the most gain bandwidth. In long-pulse operation, multiple passes through the amplifier make up for the lower input energy.

After the expanded beam makes an initial pass through the seven-disk booster amplifier, it is reflected 180º by a fold mirror and the Brewster's angle polarizer (POL1) to enter the main laser cavity at a level 1.5 m lower. This represents a layout change from the NIF to fit the beamlines into a smaller building. As a result, the focal length of the TSF is shorter than the NIF TSF. This change also results in a smaller fold mirror and a different coating requirement for this mirror because of the reduced angle of incidence.

The beam must be *p*-polarized relative to the disks in both amplifiers. The amplifier disks are mounted lengthwise on edge to minimize stress, requiring a horizontal orientation of the electric field. The electric field is therefore *s*-polarized relative to the fold mirror and Brewster's polarizer POL1, resulting in maximum reflectance from the polarizer surface.

To permit four passes through the main amplifier, the polarization of the beam must be rotated to prevent the beam from being reflected out of the cavity following the second pass. The PEPC is used to accomplish this. It is an electro-optic device developed at LLNL that rotates the electric-field vector of plane-polarized radiation by 90º. For four-pass operation, the PEPC is initially in its "off" state. After the pulse has passed through the PEPC, the device is switched to its "on" state by applying a high voltage (~20 kV). The returning beam is then rotated to a vertical polarization state, making it *p*-polarized relative to the Brewster's angle polarizer POL1, resulting in high transmission through the polarizer. The beam then reflects from the cavity end mirror and returns through the polarizer and the "on" PEPC. The PEPC rotates the beam's polarization another 90º back to its initial, horizontal orientation. The voltage on the PEPC is then turned off, and, following the fourth pass, the beam is switched out of the cavity by POL1 and returns to the upper beamline.

The net small-signal gain through the main and booster amplifiers is ~10^5. The deformable mirror at one end of the laser cavity corrects for low-spatial frequency aberrations (of length scale ≥33 mm) introduced by the amplifier disks. A sample of the output beam immediately after the TSF is deflected to a Shack–Hartmann wavefront sensor. The output of the wavefront sensor is used to generate error-correction signals sent to each of 39 actuators on the deformable mirror.

The cavity and transport spatial filters each use a pair of aspheric lenses housed at the ends of evacuated tube assemblies to spatially filter the light between amplifier passes and to provide relay-plane imaging. The cavity spatial filter relays the image plane of the front-end apodizer to the deformable mirror. North of the TSF assembly there is a diagnostic beamsplitter mirror (DBS) to provide a path to beam diagnostics and alignment packages.

In both the cavity and transport spatial filters, the beam passes through a different pinhole on each pass through the spatial-filter focal plane. This "angular multiplexing" reduces the likelihood of pinhole closure in the cavity spatial filter, where there are four pinholes in an assembly, one for each pass. Angular multiplexing is used in the TSF to allow the seed beam to be injected into the main beamline.

To permit two passes through the main amplifier, the polarization of the beam does not need to be rotated to prevent the beam from being reflected out of the cavity following the second pass. The PEPC remains in its passive state while the pulse is in the cavity so that the pulse exits the cavity after its second pass. A second Brewster's angle polarizer (POL2) is inserted in the cavity during short-pulse operation, oriented 90º in azimuth from POL1, so that light will be transmitted when the PEPC is "off." In conjunction with the PEPC, POL2 provides a simple means of preventing back-reflected pulses from the target from re-entering the main amplifier. (Pulses back-reflected from the target could extract gain from the amplifiers and damage the injection mirror in the TSF.) The PEPC is pulsed "on" just after the main pulse exits the cavity. Back-reflected light that has re-entered the beamline has its polarization rotated by the PEPC and is rejected from the system by POL2 into a beam dump before it can reach the main amplifier disks and deformable mirror.

This second polarizer is only used when the beam is operated in short-pulse mode (two or four pass), when there is a risk of IR light being back-reflected from the target. In long-pulse mode, any UV light reflected from the target cannot pass the IR transport mirror and cannot re-enter the beamline. POL2[3] is removed from the cavity to avoid damage in this mode of operation. Insertion of POL2 into the cavity introduces a shift in the beam centerline that is compensated for by the insertion of an oppositely

[3]Note: Only the short-pulse Beamlines 1 and 2 have the second polarizer (POL2).

oriented Brewster's angle plate or polarizer. Support structures mounted on the laser bay floor house the fold mirror, the PEPC, polarizers, and the cavity end mirror.

The components of the beamline are interconnected with nitrogen-filled beam tubes. The nitrogen in these tubes prevents oxygen from degrading the internal silver reflecting surfaces of the amplifiers at the ends of the main and booster amplifiers and maintains the low-percent RH working environment required by the coatings on the polarizers. The tubes and amplifiers are positively pressurized to ~0.1 in. of H_2O and a temperature, percent-oxygen and percent-RH monitoring system provides an out-of-specification alarm in the Control Room.

1.5.1 Beam Transport

Depending on the individual beamline and experimental conditions, the amplified pulse emerging from the transport spatial filter may take one of several paths, as shown in Fig. 1.7. For short-pulse experiments, Beam 1 or Beam 2 may be routed to the upper or lower compressor in the GCC, where four matched MLD tiled grating assemblies temporally compress the pulse. A deformable mirror after the fourth tiled grating assembly provides static wavefront correction. After passing through individual compressors, the beams are co-aligned through a polarizing beam splitter called the beam combiner. Beam 1 is reflected off this optic in s-polarization while Beam 2 is transmitted in *p*-polarization. The co-aligned beams are routed to one of the target chambers using the target chamber selection mirror and focused using an *f*/1.8 off-axis parabolic mirror. Transport from the GCC is in an evacuated beam transport tube connected to the target chamber being used.

Alternatively, after the compressed pulses reflect off their respective DM, the beams may be independently and simultaneously directed to the OMEGA EP backlighter and sidelighter (see Fig. 1.4). The beam from the upper compressor may be directed to the backlighter and the beam from the lower compressor may be sent to the sidelighter. This capability allows for stereoscopic viewing of target experiments. This capability does not exist for the OMEGA target chamber as there is only one beam transport tube. The flow chart below and Fig. 1.7 illustrate this concept.

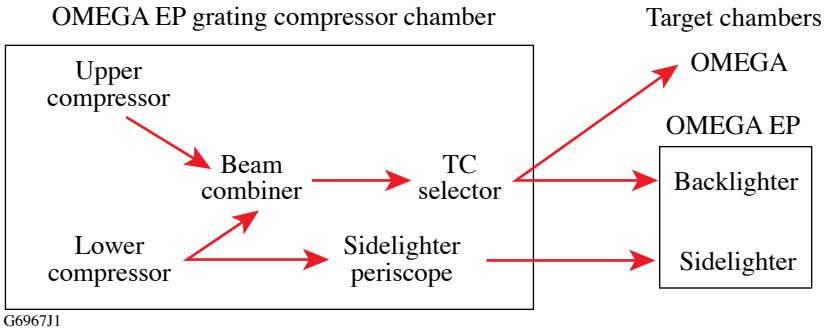

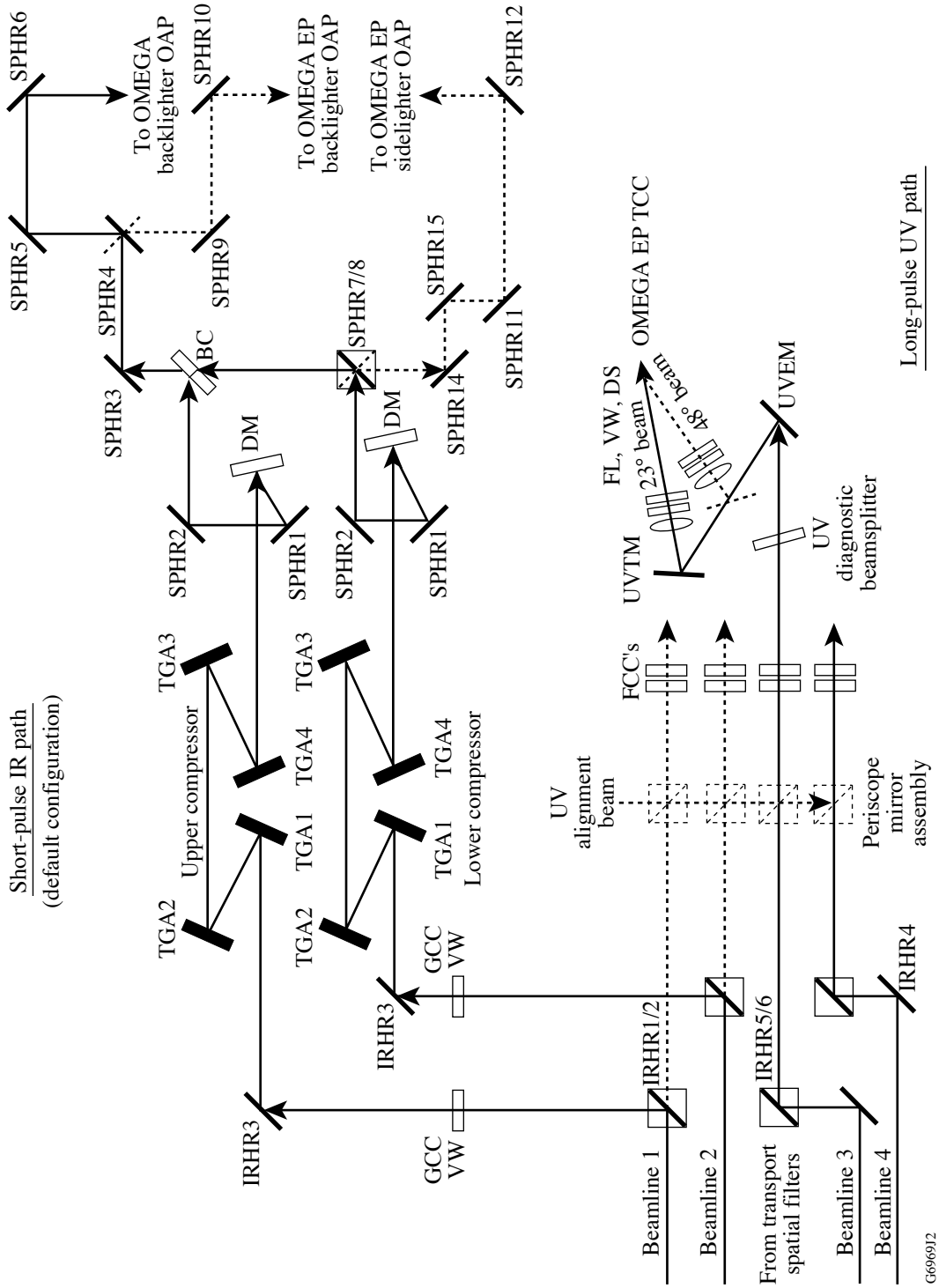

Figure 1.7
Beam transport and focusing paths from the transport spatial filter to the target chambers for Beams 1 and 2. Beams 3 and 4 follow the long-pulse UV path only. The short-pulse beams are IR only, and the long-pulse beams are UV only.

Within the GCC, full-aperture calorimeters may be inserted to measure the energy of the high-intensity pulses. Additionally, each compressor line has a "leaky" mirror (~1%) that samples the compressed pulse and, with other optics, directs the beam to the short-pulse diagnostic package (SPDP) table for characterization. The SPDP table is located just south of the GCC on the Laser Bay floor.

For experiments requiring long-pulse (1 to 10 ns) beams, the 1053-nm beams are frequency tripled to 351 nm using potassium dihydrogen phosphate (KDP) and deuterated potassium dihydrogen phosphate (KD^*P) frequency-conversion crystals (FCC's) and then transported to the OMEGA EP target chamber. They cannot be directed to the OMEGA target chamber. Each beam is focused onto the target using an *f*/6.5 aspheric lens followed by a vacuum window and a thin debris shield. An option to smooth the target-plane profile is to place a distributed phase plate (DPP) just before the lens. In the baseline configuration, the beam is directed to the ports at a 23º angle of incidence with respect to a common central axis of the target. Beam transport to a 48º angle of incidence ports is a future option.

The frequency-conversion performance is diagnosed with a 4% diagnostic pickoff located after the FCC's in an arrangement similar to that used successfully on OMEGA. The pickoff diagnostics also include alignment sensors for co-aligning a UV alignment source to the IR alignment source. Each of the four beamlines has its own UV diagnostics (UVDP) and alignment table (UV-ASP) that are located near the target chamber on the target area structure (TAS). The UV alignment source is located on its own table (UVAT) located on the Laser Bay floor in front of the TAS, and its output beam is introduced just before the FCC's with the periscope mirror assembly (PMA). The placement of the FCC's before the target chamber (rather than on the target chamber as in the NIF) permits more convenient beam diagnostics and allows for the separation of unconverted light.

1.5.2 Grating Compressor Chamber

The pulse-compression grating systems are located in a large rectangular vacuum chamber, 15 ft (inside) square and 70 ft long, known as the grating compressor chamber or GCC. The vessel is located in the northwest corner of the Laser Bay. An equipment entry door on the south end facilitates insertion of large pieces of equipment, while two smaller entry doors located on the north and south ends provide personnel access. A conceptual drawing of the GCC is shown in Fig. 1.8.

The GCC houses two independent pulse compressors, deformable mirrors, compressor alignment mirrors (CAM's), transport mirrors, full-aperture calorimeters, a beam combiner, and the transport chain optics to the SPDP table. In addition, a pair of interferometers is used to align the tiles of each tiled-grating assembly (TGA). The pulse compressors are each comprised of four TGA's. Each TGA is comprised of three tiled MLD gratings. A diagram of the internal components of the GCC illustrating the 14 optical tables, 8 TGA's, and target chamber selection mirror is shown in Fig. 1.9.

The optical path of the upper compressor is shown in Fig. 1.10. Beam 1 or 2 from the switchyard enters via a vacuum window located on the east side of the GCC and is directed toward the first TGA, G1. The beam-incidence angle on G1 is 72.5º. The refracted beam is directed toward TGA G2 then TGA G3 and finally TGA G4. At G4, the pulse has been temporally compressed by up to 300 ps/nm.

Emerging from G4, the pulse reflects off the compressor deformable mirror (DM). This DM is used to correct for aberrations in compressor optics and the short-pulse transport and focusing optics. The diagnostic mirror allows 1% of the pulse to be directed to the SPDP table. The remainder of the pulse

reflects off the surface of the beam-combiner mirror to the target chamber selection mirror. The design of the lower compressor is identical; however, after the diagnostic mirror, the pulse transmits through the beam combiner where it becomes co-aligned with the pulse from the upper compressor.

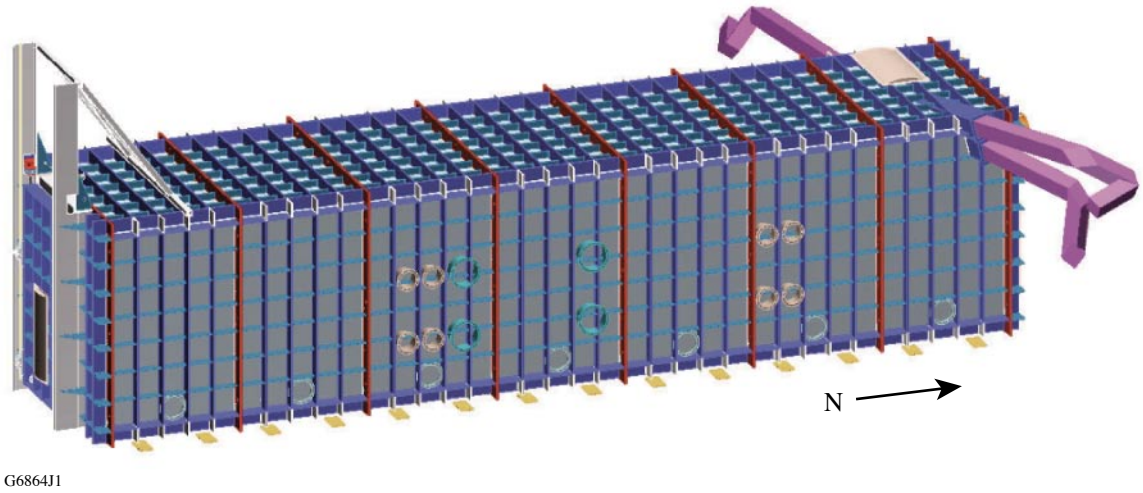

Figure 1.8
A drawing of the GCC shows the main equipment access door to the south and the beam exit ports to the north. The two beam exits to the east support OMEGA EP's sidelighter and backlighter capabilities. The west beam penetrates the shield walls of OMEGA EP and OMEGA and enters the OMEGA target chamber at port H9.

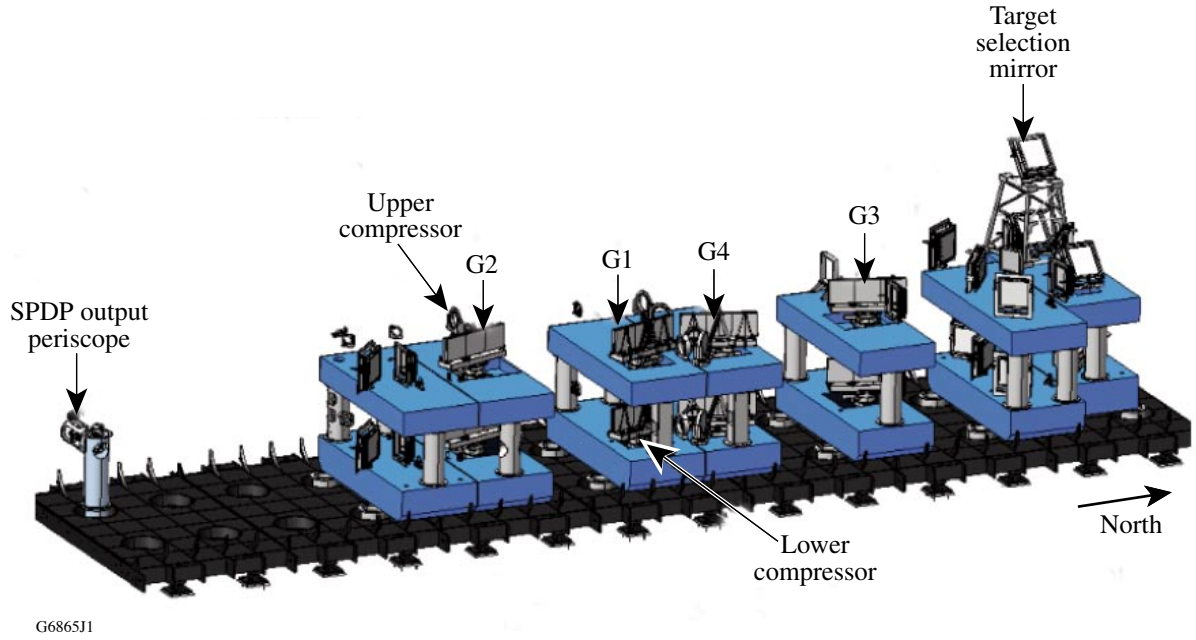

Figure 1.9
Illustration of the inner workings of the GCC shows the locations of the TGA's, G1 to G4, and the target chamber selection mirror. The upper and lower compressors for Beams 1 and 2 are aligned atop one another. After pulse compression, the co-aligned beams reflect off the selection mirror and exit the GCC, propagating to the target chamber of choice. Diagnostic beams exit the GCC via the SPDP output periscope.

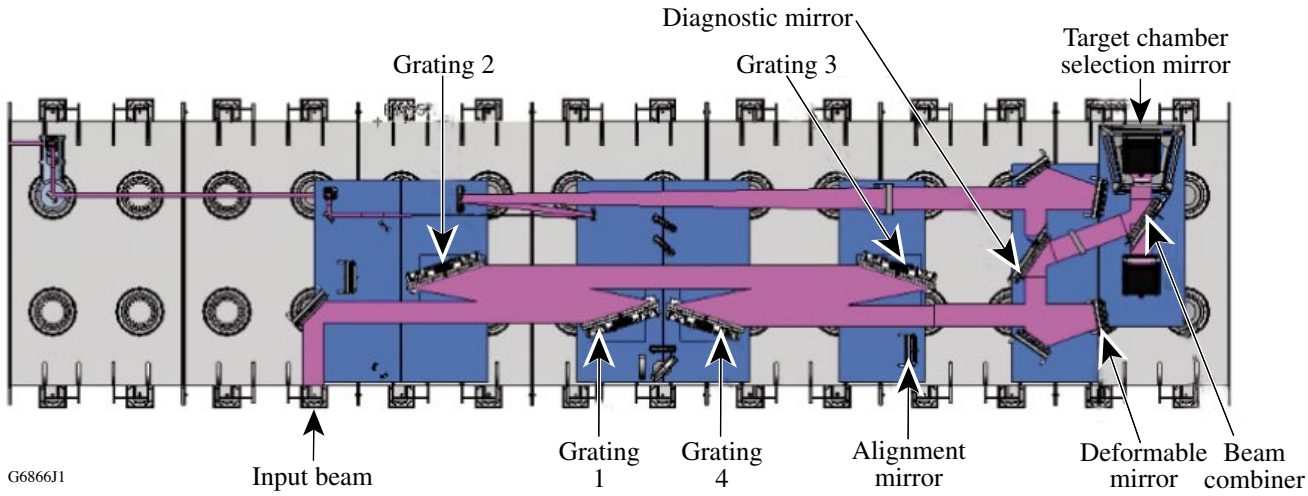

Figure 1.10
An illustration of the upper compressor's optical path including the deformable mirror, beam combiner and target chamber selection mirror. The diagnostic mirror provides a 1% pickoff for the short-pulse diagnostics, shown exiting the chamber to the left. The optical configuration of the lower compressor is identical. The circles in the drawing are the GCC mounting points.

In an alternative configuration the compressed-pulse-transport path permits the simultaneous delivery of the compressed pulses to the OMEGA EP sidelighter and backlighter OAP's (see Sec. 1.5.1).

Each of the eight TGA's is comprised of three MLD gratings. A photograph of a TGA is shown in Fig. 1.11. The width of the assembly is designed to accommodate the beam footprint at 72.5º.

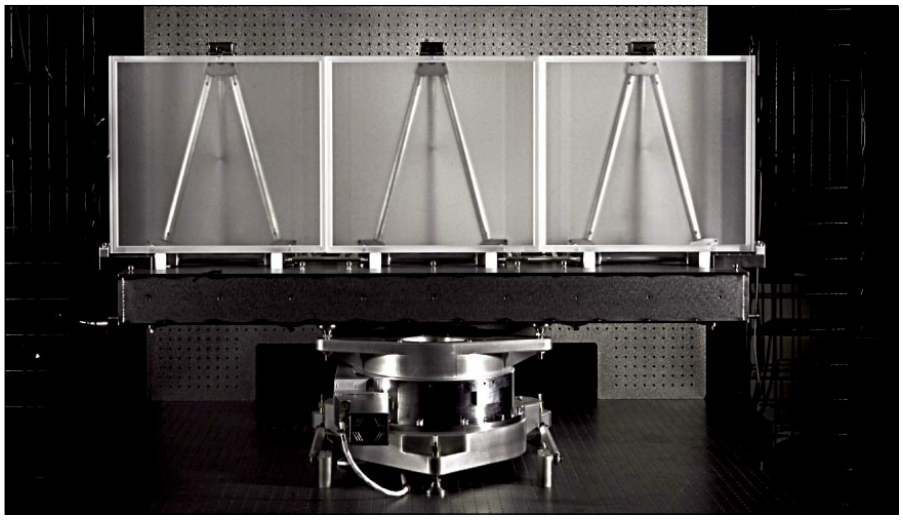

Figure 1.11
The photograph shows the three tiled gratings aligned on the optical table and supported by a rotary stage used for coarse alignment. Each of the outboard tiles has a precision control system used to align the beam wavefront to that of the center grating tile.

Three smaller gratings, rather than one large grating, were designed to facilitate their manufacture. The gratings have a vertical pitch of 1740 l/mm and the outboard tiles are individually aligned to the center tile for tip, tilt, rotation, piston, and shift to a high precision, minimizing wavefront error. The tiles rest upon a precision *x*, *y*, *z* translation stage for initial alignment. Tiling alignment is accomplished using an interferometer incorporated into the compressor.

Each compressor has a complete suite of diagnostic instrumentation to characterize pulse duration, spectrum, wavefront, and beam alignment. These instruments are located in the SPDP table.

1.5.3 Target Chamber and Target Area Structure

The OMEGA EP target chamber is similar in design to the OMEGA target chamber and has the same 3.3-m diameter. The chamber is located within the target area structure (TAS) located at the north end of the Laser Bay. A drawing of the TAS and TC is shown in Fig. 1.12. The chamber is the heart of the experimental system, where targets are irradiated and the various diagnostics are supported. The diagnostic suite has both fixed and flexible diagnostic platforms. Future fixed diagnostics will include plasma calorimeters that measure absorbed laser energy, x-ray pinhole cameras that capture time-integrated images of the target emission, Kirkpatrick–Baez (KB) microscopes, and x-ray streak and framing cameras that record time-resolved x-ray spectrum images. Flexible accommodations for experimental diagnostics are provided by ten-inch manipulators (TIM's). Each provides mechanical, vacuum, and electrical/control support and positioning for any compatible instrument that needs to be positioned near the center of the target chamber.

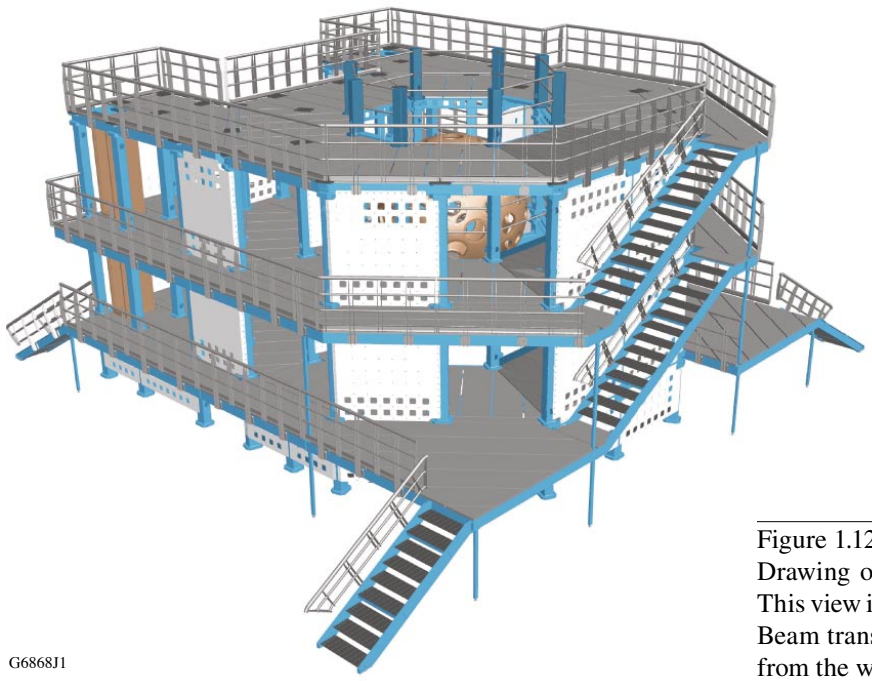

G6868J1

Figure 1.12
Drawing of the TAS and the TC located within. This view is from the northeast, looking southwest. Beam transport tubes from the GCC enter the TC from the west (not shown).

The TC design takes advantage of the substantial infrastructure developed for the OMEGA System and allows for the full compatibility of existing diagnostic instrumentation. The TC will support six ten-inch-manipulator (TIM) diagnostic shuttles (three initially), a target positioning system (TPS), a target viewing system (TVS), and other support items whose designs are based on their OMEGA equivalents. The top and bottom ports are reserved for the future addition of a planar cryogenic target system. The TC has two off-axis parabola inserter/manipulators (OAPI/M). These TIM-like devices are used for the insertion and removal of the off-axis parabolas. Beam transport tubes from the GCC enter the TC from the west and provide for sidelighting and backlighting target applications. The TAS also supports the IR transport mirrors, FCC's, PMA, UV end and target mirrors and the diagnostic pickoffs for the four UV diagnostic packages. The UV alignment table (UVAT) is located on the Laser Bay floor, south of the TAS.

1.6 TIMING SYSTEMS

The Hardware Timing System (HTS) provides precision timing signals (see Table 1.4) that synchronize the OMEGA EP subsystems to produce a laser pulse and acquire diagnostic data. End-to-end synchronization is provided by the reference frequency generator (RFG) that drives the laser's master oscillator, the master timing generator (MTG), and the timing crates. The MTG provides derived rates that are also distributed. Local timing stations known as "crates," include programmable modules that provide synchronized, precisely delayed rate and trigger signals. Figure 1.13 provides a simplified block diagram showing the main components of the HTS and the paths of the timing signals. The timing signals include (1) the video sweep signals that are synchronized with the master laser oscillator to allow video cameras to capture the laser pulses, (2) trigger signals for the electro-optical devices that select and shape optical pulses in the laser portion of the system, (3) trigger signals for the power conditioning units that power the high-voltage flash lamps in the laser amplifiers, and (4) trigger signals for high-speed diagnostic instruments for both laser-system and target-physics applications. The signals are distributed throughout the facility and provided to equipment via colocated CAMAC®[4] rates. A software control interface is provided to allow operators to select rates and set delays to these timing signals.

The RFG consists of a precision crystal oscillator, a distribution amplifier, and a series of passive signal splitters mounted with control and monitor circuits in a standard 19-in. rack-mount enclosure located in the Laser Sources Bay. The oscillator design ensures a frequency stability better than 1 ppm during all operations. The RFG is the starting point for all the timing signals and produces a nominal 38-MHz sine wave whose frequency is doubled to drive the laser's master oscillators. The RF signal is distributed to the MTG and also to a rate regenerator module (RRM) in each of the timing crates distributed throughout the laser systems. The 38-MHz RF and the other (digital) signals used by the HTS are distributed throughout the facilities. The RRM in each crate accepts the RF signal, 0.1-Hz rate, and T–10 and T–0 digital signals from the MTG. The RRM regenerates these signals and provides them to quad-channel delay modules (QCDM's). Each QCDM has four independent channels that can each be set to implement a precision delay to one of the seven input signals. As many as 12 QCDM's can be installed in a crate with one RRM.

[4]Computer automation and control (CAMAC) is a set of industry standards that defines mechanical, electrical, and communications protocols. These allow standard and custom built functional modules to be provided with mechanical support, electrical power, and a unique data-bus connection in standardized card cages known as CAMAC crates.

The MTG outputs horizontal and vertical video synch and 5-Hz and 0.1-Hz signals synchronized to the 38-MHz master oscillator signal. Synchronized, single-pulse shot triggers (T–0 and T–10) are also produced by the MTG in response to enabling signals provided by the Power Conditioning Executive (PCE) workstation. The MTG timing signals are distributed to the appropriate elements (primarily timing crates and alignment video equipment.

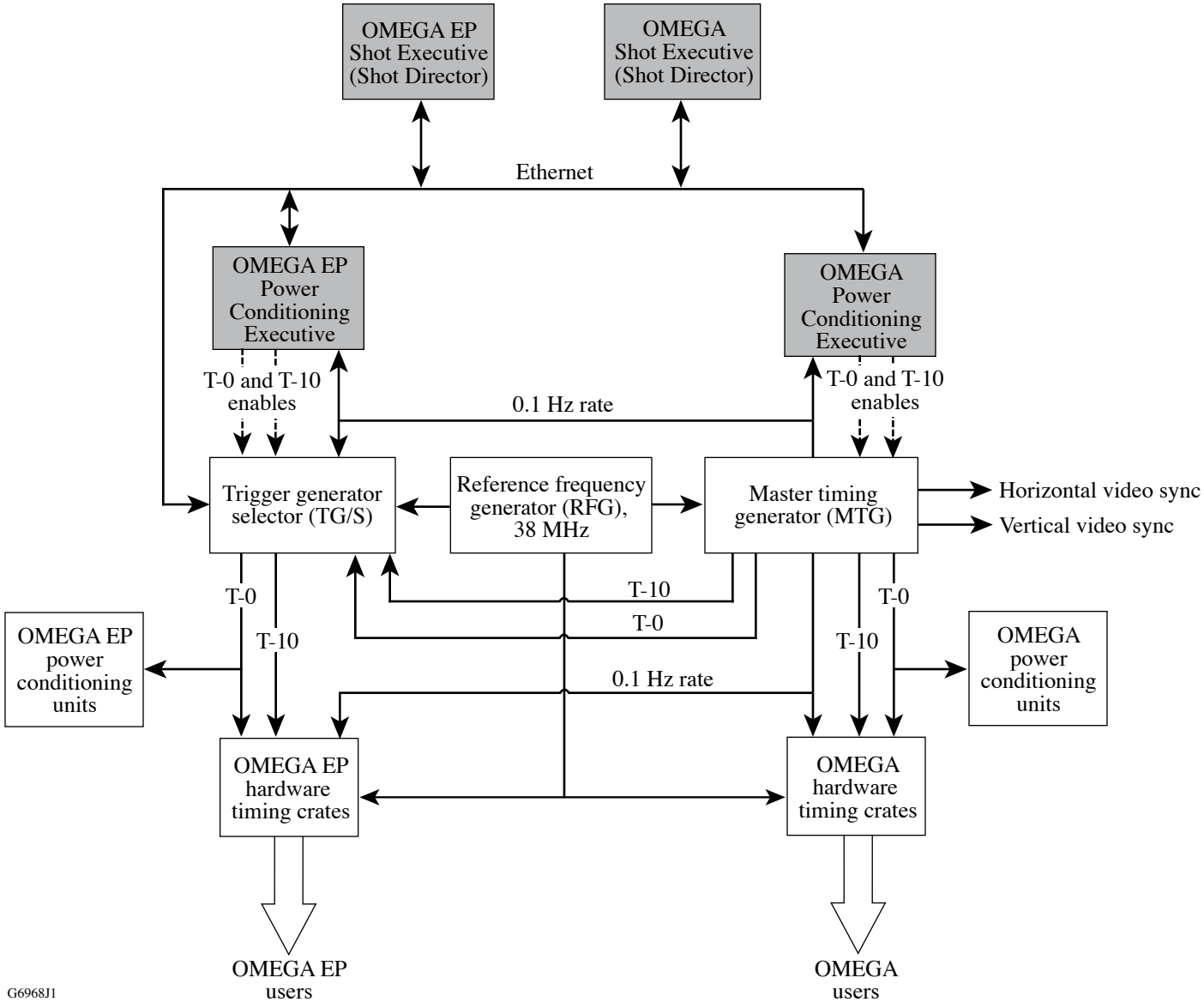

Figure 1.13
Block diagram of timing control for joint shot operations. The reference frequency generator (RFG) is common to both systems. The shot triggers used in the OMEGA EP system are distributed by a trigger generator/selector unit (TG/S) that has separate modes for independent and joint operations. In the independent mode, the TG/S generates synchronized T–10 and T–0 shot triggers for OMEGA EP only. In the joint mode, the signals generated by the MTG are used in both systems.

The shot triggers used in the OMEGA EP system are mediated by a trigger generator/selector unit (TG/S) that has separate modes of operation for independent or joint operations. In either mode, the 0.1-Hz signals pass through the TG/S before reaching the OMEGA EP Power Conditioning Executive (EP-PCE) and the timing crates. When the two laser systems are operating independently, the TG/S isolates OMEGA EP from the shot triggers produced by the MTG and generates synchronized T–10 and T–0 shot triggers under the control of the EP-PCE. These are used to trigger the power conditioning units (PCU's) and are provided to all other timing system users via the timing crates. In joint operations, the OMEGA Power Conditioning Executive does not enable the shot triggers until the PCU's in both systems are at volt. The TG/S passes the signals from the MTG to the OMEGA EP PCU's and other users and produces no shot triggers of its own. The operating mode of the TG/S is controlled by the OMEGA EP Shot Executive (EP-SE) based on the joint shot features of the Shot Request Form. In this implementation, the optical pulses produced by the two systems are always synchronized with each other. In the independent mode, each system functions as if it had an independent, dedicated timing system. In the joint mode, the critical shot triggers originate from a single source and are shared to make the two systems act as one. This approach allows the OMEGA optical timing fiducial to be used in OMEGA EP and minimizes the adjustments needed to prepare for joint operations.

Table 1.4: Digital signals available at HTS crates.

Signal	Rate/Trigger
1	Diagnostic rate
2	0.1 Hz
3	5 Hz
4	T–0
5	300 Hz
6	T–10
7	30 Hz

1.7 OPTICAL ALIGNMENT

The complexity of the OMEGA EP System requires the control system be able to align Beamlines 1 and 2 to the targets in the OMEGA or OMEGA EP target chambers (TC). For the OMEGA EP target chamber, Beams 1 and 2 may be directed to either the backlighter (port 33) or sidelighter (port 69) ports (not visible), or after frequency conversion, to the 23° or 48° ports (deferred) assigned to them. Figure 1.14 shows a diagram of the TC and the port entry locations.

Beams 1 and 2 may also be directed to the OMEGA TC as co-aligned, but temporally offset beams. The beams enter port H9 and travel across the chamber to the off-axis parabola inserted in port H7.

Beams 3 and 4 may only be directed to the 23° or 48° ports (deferred), shown in Fig. 1.14. A complete list of TC port assignments is available in the System Engineering and Configuration Requirements for OMEGA EP, S-AA-G-05 document.

Each of the main beams has a cw alignment laser (1053 nm) located on the infrared alignment table (IRAT) that contains an alignment sensor package (ASP). The IRAT tables are located adjacent to the injection tables, just south of the TSF vacuum vessels. The IRAT beam is propagated through the beamline via the injection mirror, and a series of crosshairs are used to align the beam using the video and beam motion control systems. The IRAT beam also enters the GCC, where it traverses either the upper or lower compressor to the short-pulse diagnostic package (SPDP) table, completing an alignment handoff with the SPDP ASP.

Beam	23° port	48° port
1	37	22
2	64	78
3	63	77
4	38	23

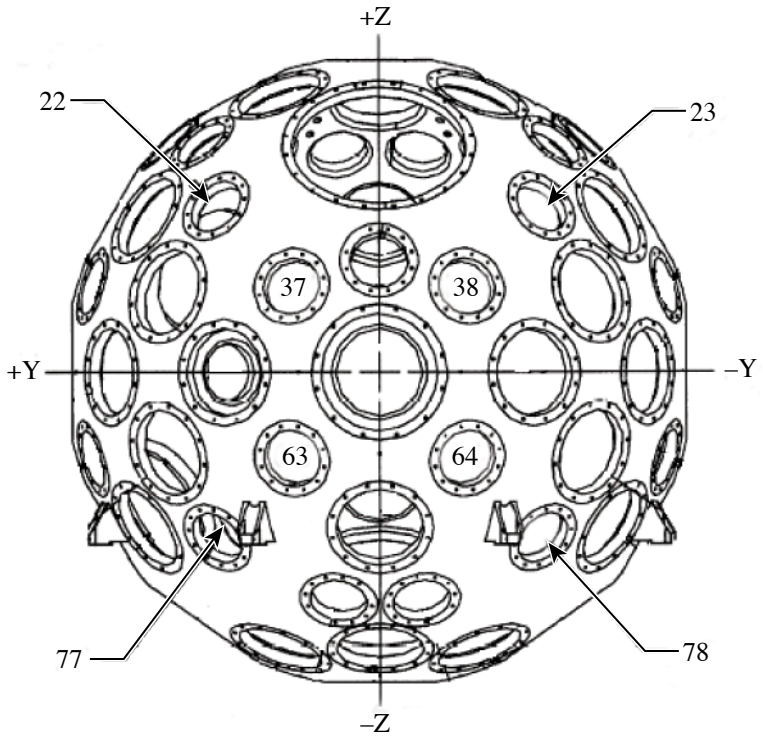

Figure 1.14
The south elevation view of the OMEGA EP target chamber shows the 23° and 48° entry port locations. The backlighter OAP inserter/manipulator resides in the large port at the center of the drawing and the sidelighter OAP manipulator is located at the "–Y" equatorial location.

The SPDP also contains an alignment laser (1053 and 1047 nm) that can be propagated through either pulse compressor to a crosshair located between the diagnostic beamsplitter (DBS) and the first tiled-grating assembly, establishing a second pointing reference. Also, the SPDP laser may be directed to the parabola alignment diagnostic (PAD), located in either target chamber. A series of crosshairs along the short-pulse beam path aids in the pointing handoffs. The PAD is deployed in one of the TIM's on either target chamber and allows for the focusing and wavefront properties of the OMEGA EP laser to be completely characterized and aligned from within the target chamber. The PAD provides tools to align the off-axis parabola, calibrate the focal spot diagnostics, and provides wavefront characterization of the short-pulse transport optics. A schematic diagram of the PAD is shown in Fig. 1.15.

The alignment laser in the PAD propagates down the short-pulse beam path through a series of crosshairs to the SPDP-ASP, completing the short-pulse alignment.

The PAD laser and the dual wavelength SPDP laser are used in combination with compressor alignment mirrors (CAM's) in the pulse compressor to align the compressor. The tiled gratings in each compressor are aligned using an interferometer in the GCC as shown in Fig. 1.16.

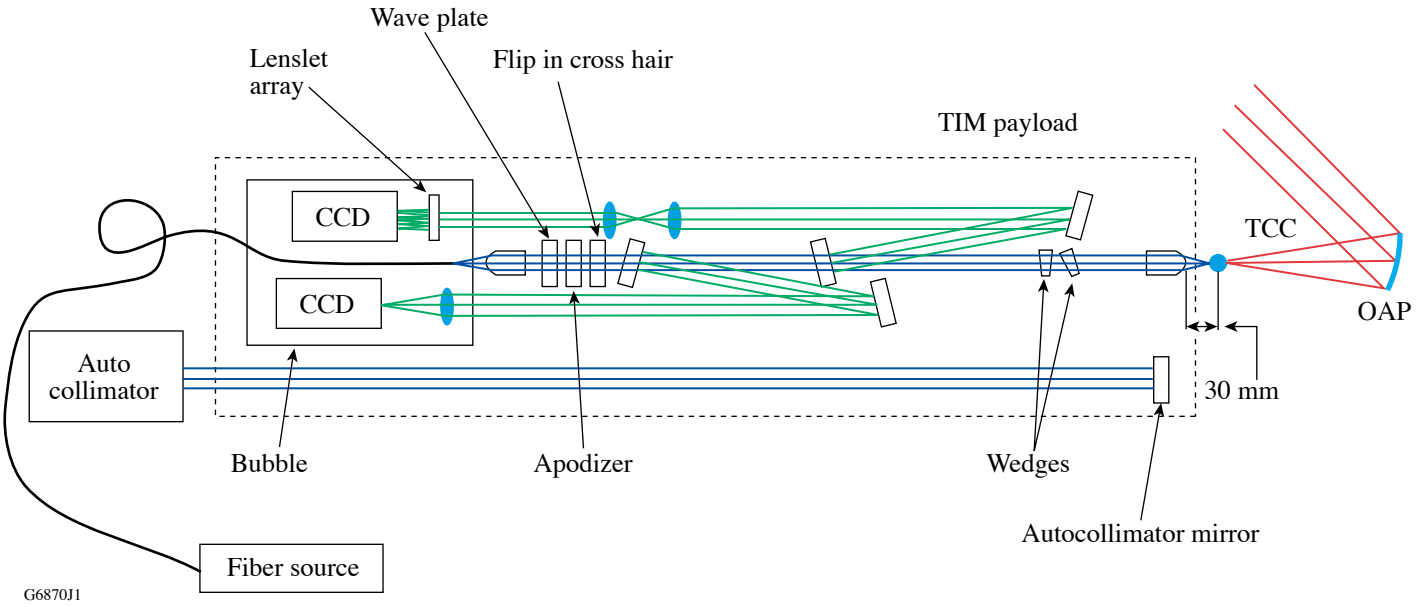

Figure 1.15
The PAD is a self-contained, TIM-based diagnostic, portable between target chambers. A Shack–Hartmann sensor measures the wavefront reflected off the OAP, the autocorrelator monitors the angular displacement of the PAD optics, and a pointing diagnostic determines the location of target chamber center (TCC).

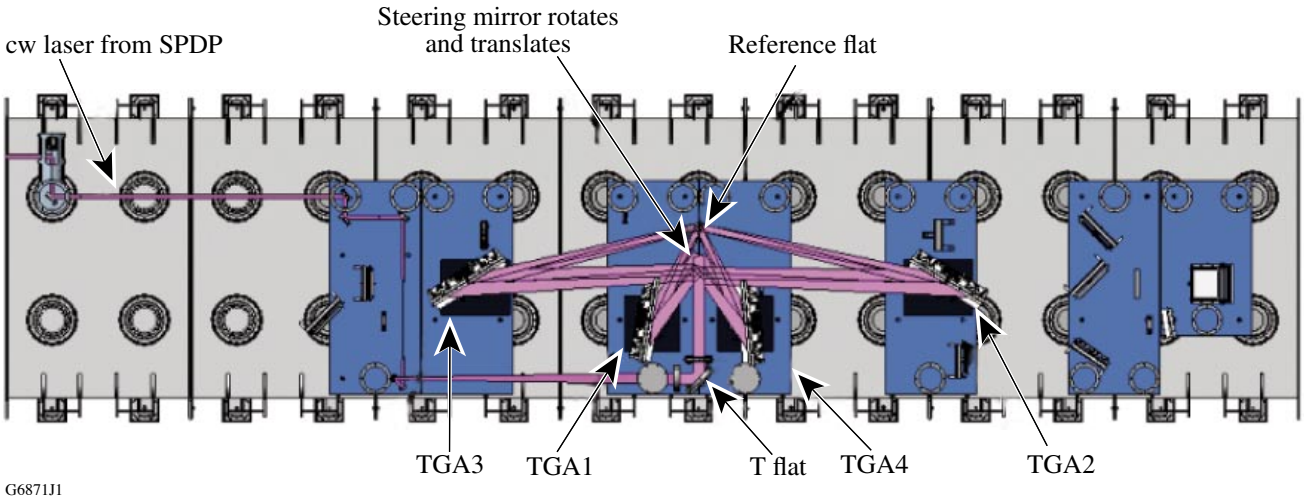

Figure 1.16
Integrated interferometers (one shown) in the GCC allow for the precision alignment of the tiles in each tiled-grating assembly for each pulse compressor. Insertable CAM's located before TGA1, between TGA's 2 and 3 and after TGA4 support alignment of the TGA's. A two-wavelength Littrow alignment procedure using the SPDP laser is used to align the compressors.

1.8 LASER DIAGNOSTICS

1.8.1 Infrared Diagnostic Package (IRDP)

A suite of diagnostic instrumentation is dedicated to each of the beamlines. These diagnostic packages are designed to provide comprehensive information about system performance in preparation for and during a target shot. Measurements are made of the beam energy, pulse shape, near-field and far-field spot profiles, and full-aperture beam wavefront. Alignment diagnostics point and center the beam and are used to monitor alignment from the injection point to the amplified beam emerging from the end of the TSF. The IRDP tables are located between the two spatial-filter pinhole vessels.

The source beam for the IRDP comes from the first surface reflection of the IR diagnostic beam splitter (IR-DBS). This beam may originate from a cw laser on the infrared alignment table (IRAT) or from the Laser Sources Bay (5-Hz pulse). These beams are injected onto the injection mirror located within the TSF from the injection table. The IR-DBS is a flat, wedged plate oriented at 0.1º relative to beam normal and is located at the output end of the TSF. Approximately 0.2% of the incident light is reflected from the front surface of the IR-DBS back through the TSF output lens where the converging beam is folded to fit within the TSF pinhole area vacuum vessel. There the beam is collimated and delivered to the IRDP optics table where it acts as the source beam for the various alignment and shot diagnostics.

1.8.2 Short-Pulse Diagnostics Package (SPDP)

Each of the two short-pulse beams has a dedicated diagnostics suite comprised of at least ten individual diagnostic instruments. These instruments diagnose the properties of the beams before they are co-aligned and exit the GCC. The SPDP provides information on beam quality, energy, alignment, spectrum, optical component damage, output wavefront, pulse width, and pulse contrast.

After each short pulse beam is temporally compressed by the pulse compressors and wavefront corrected by the deformable mirror, they are directed to a “leaky” mirror where the majority of light incident on the mirror reflects off the surface but a small portion bleeds through the mirror, forming the diagnostic beam. For the upper beam, a flat mirror folds the transmitted light through the “leaky” mirror into an optic with a slight wedge. The first surface of the wedge is uncoated, providing a 4% reflection, while the rear surface of the wedge is highly reflective. The small pointing difference between the beam reflecting off the front and rear surfaces of the wedge allows an operator to select either the low- or high-transmission path. In the case of the lower compressor beam, a single 45º fold mirror replaces the wedge and fold mirror pair. In either the upper or the lower compressor, the diagnostic beam is then directed to the first of a pair of down-collimation lenses. The use of a wedge having two reflectances reduces *B*-integral for on-shot measurements and optimizes energetics for the diagnostic instruments in pre-shot mode where only alignment laser beams are available.

The SPDP also includes a dual-wavelength IR alignment laser (1053 nm and 1047 nm) that can be used to illuminate the compressor short-pulse transport path to the target, and the Fizeau interferometer in the GCC. This beam allows alignment and setup of the pulse compressors to be conducted independently of the main beamline.

1.8.3 Ultraviolet Diagnostic Package (UVDP)

The UVDP and alignment sensor package (ASP) tables are located on Levels 1 and 2 of the target area structure (TAS) and are symmetrically arranged about the target chamber. These diagnostic packages provide comprehensive information about system performance, both in preparation for and during a target shot. Measurements are made of the beam energy, near-field (including IR) and far-field spot profiles as well as contrast, and harmonic energies.

The source beam for the UVDP comes from the ultraviolet alignment table (UVAT) located on the Laser Bay floor south of the TAS. A periscope mirror assembly (PMA), similar to OMEGA's, directs the alignment beam into the optical path prior to the FCC's. A UV diagnostic beam splitter (UV-DBS) provides 4% of the incident light to a transmissive off-axis parabola that relays 4% of the beam into the UVDP and ASP. The remaining energy is blocked by a full-aperture calorimeter.

Because the high-energy pulsed beam is converted from IR to UV part way through the system, the alignment system must include both IR and UV sources. A hand-off between the two alignment sources takes place at the UV diagnostic package's ASP. These utilize achromatic optics so that they can function at both wavelengths and are located on the target area structure. Each beamline has its own ASP that includes a special full-aperture pickoff optic that reflects 4% of the beam energy into the diagnostic subsystem while allowing the remainder to propagate onward to the end mirror. During the alignment process, a sample of the alignment beam is directed to the alignment sensor. On a shot, the 4% sample of the high-energy pulse is directed to beam performance diagnostics on the UVDP table.

The UV portion of the system is aligned using a 351-nm cw laser that is located on the UVAT located on the Laser Bay floor, south of the TAS. The UVAT optics project a separate full-aperture alignment beam into corresponding PMA's. Each PMA functions to position movable mirrors to inject the alignment beam into one beamline at a time.

Co-alignment of the IR and UV alignment beams in each beamline is achieved by steering the PMA mirrors to point the UV alignment beam to the pointing reference in the UVDP-ASP. The portion of the UV alignment beam that passes through the pickoff optic is then steered to the target by moving the transport mirrors and confirmed to be aligned by retroreflection back to the UVAT.

1.8.4 Full-Aperture Calorimetry

Full-aperture IR calorimeters are the primary diagnostics used to measure the absolute energy of the IR long- and short-pulse beams, providing accurate energy measurements of the amplifier output energies. Laser light incident on the calorimeter absorber glass (NG-11) is transferred to an aluminum diffuser in the form of thermal energy that is converted to a voltage by a thermoelectric array. A data acquisition and control system monitors the output voltage from the calorimeter.

Each of the four beamlines is equipped with an IR calorimeter that is located on the switchyard tower and may be inserted into the beam path prior to a laser shot. The calorimeters in Beamlines 1 and 2 may be removed and re-installed on the short-pulse polarizer assembly (replacing the beam dump) to measure the energy of the light reflected from the target.

In addition, each of the two pulse compressors located in the GCC has an associated calorimeter that may be inserted to measure the energy going into the target chambers. These calorimeters are located just prior to the beam combiner optic (SPHR2).

Each of the four UVDP's will have an energy diagnostic that will measure the combined 1ω, 2ω, and 3ω incident light energies. It has not been determined whether these calorimeters will be full-aperture or subaperture devices.

1.9 CONTROL SYSTEM AND JOINT OPERATIONS PLAN

OMEGA EP is operated in a manner identical to the OMEGA Laser Facility. Existing LLE infrastructure includes specific instructions for operations that are directly extensible to the OMEGA EP architecture. The Laser Facility Organization and Regulation Manual (LFORM) specifies how scientific programs are allocated system time, how system time is scheduled, how training and safety programs within the facility are conducted, and addresses other critical operations issues. The OMEGA EP Facility uses a four volume set of documentation for configuration management and control of operations procedures. Volume VII describes the system architecture, Volume VIII contains all of the written procedures for operations, Volume IX describes the startup and shutdown procedures, and Volume X addresses the periodic maintenance program. The volumes are available from the "OMEGA Operations" page of the LLE Web site.

The Control System for OMEGA EP is nearly identical to that in OMEGA. The primary systems consist of beam motion control, video, and the hardware timing system. Specialized systems have been developed to deal with new technologies such as the deformable mirrors, Shack–Hartmann wavefront sensors, PEPC, grating alignment, and a new higher precision timing system, etc. The Control System architecture has been modified to reflect OMEGA EP as a subservient system to OMEGA when in the "joint" shot mode. When not shooting jointly, the two laser systems are mutually independent and capable of independent shot operations. Figure 1.17 shows the top-level executive architecture of the systems in joint shot mode. More detailed explanations of the Executives and shot operations are found in the OMEGA System Operations Manual, Volume I: System Overview and Volume VII, Chap. 8: Control System, S-AD-M-012.

Like OMEGA, the Laser Control System facilitates the operational activities that maintain the system, prepare it for a shot, execute the shot, and record the shot results. LLE's network communication system is used to coordinate actions requiring synchronization to within about one second. The timing required to execute and diagnose a shot is provided by the hardware timing system (HTS). A "handoff" between the two levels of timing control takes place 20 s before a shot is triggered. Like OMEGA, the approach to system operations makes use of the concept of a "shot cycle," consisting of a sequence of "system states" and "shot types" (see Sec. 1.9.2). The system states partition the activities into known situations for communications and coordination. The shot types identify the extent to which the high-energy, pulsed beam is propagated, and the degree of system-wide coordination that is required. Details of these concepts may be found in OMEGA System Operations Manual, Volume I: System Overview and Volume VII, Chap. 8: Control System, S-AD-M-012.

In the "active" state, the system is not formally preparing for a specific shot, and the subsystems are operated independently for maintenance or setup. Formal preparations for a shot are initiated by the Shot Director (SD) who uses the Shot Executive (SE) to specify a shot type and other key parameters

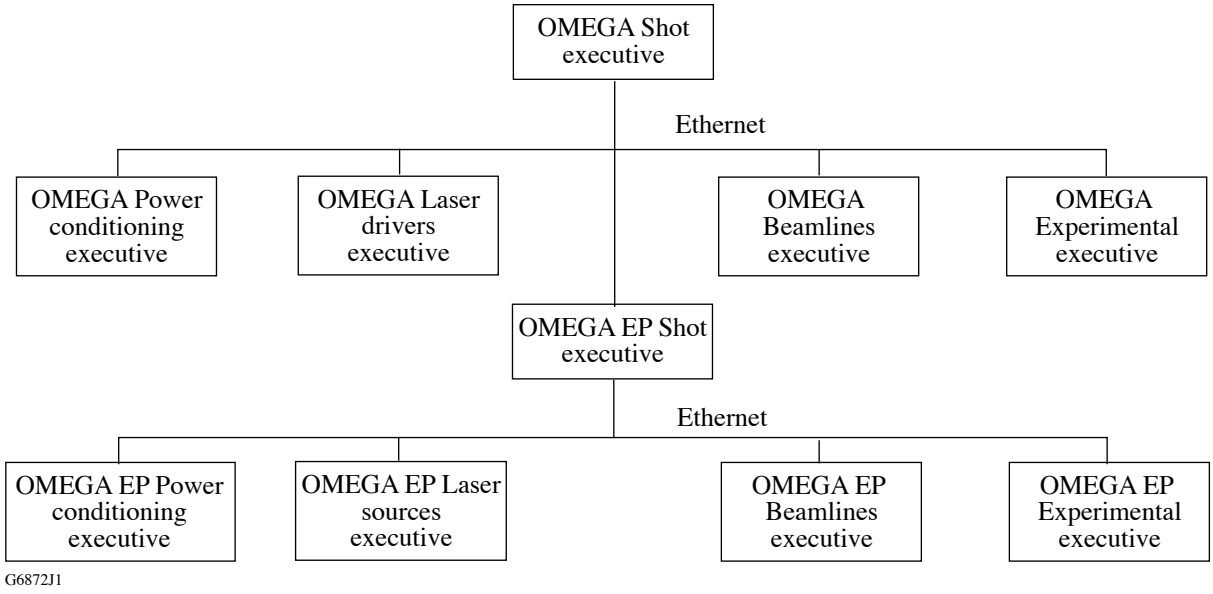

Figure 1.17
The top-level architecture of the Laser Control System, illustrating OMEGA as the senior system when used in joint shot operations. The lines connecting the executives represent the LLE ethernet. Note that the Power Conditioning Executives (PCE's) are required to communicate with each other in order to coordinate charging of the PCU's. In OMEGA EP, the Shot Director also controls the PCE, unlike OMEGA.

and to communicate them to the other operators via the subsystem executives. The act of transmitting this "master template" information marks the transition of the system from the active state to the "pre-shot" state. The SE also transmits a "shot number," which is the index to be used when the data from the intended shot is logged. Each subsystem operator reviews the setup information, signals approval to the SD, and proceeds to prepare for the shot. When a subsystem has been readied, the operator signals the SD using a "checklist" button on the executive GUI. The SD then reviews key details of the setup with the operator before signifying concurrence on the Shot Executive. In the special case of the power conditioning subsystem, this process consists of the SD developing the power conditioning "template" that details the on-line/off-line status of the power conditioning units (PCU's) and the voltage commands that will be sent to them for the shot.

Once the software and hardware sequencing has proceeded through the issuing of the shot triggers, the system enters the "post-shot" state, and each of the system elements that has acquired shot-related data proceeds to log that data to the system database. As the logging is completed, each element effectively reverts to its "active" state. When all of the elements have completed this process, the system is formally in the active state and ready to initiate another shot cycle.

1.9.1 OMEGA EP Control Room

The OMEGA EP Control Room is located on the second floor of the facility, east of the Laser Bay. Figure 1.18 shows the layout of the operations areas including the Control Room, Operations Anteroom, and System Scientist areas. Like OMEGA, the view from the Shot Director's console provides an overview of the interchangeable operations workstations and the main personnel access door into the Laser Bay.

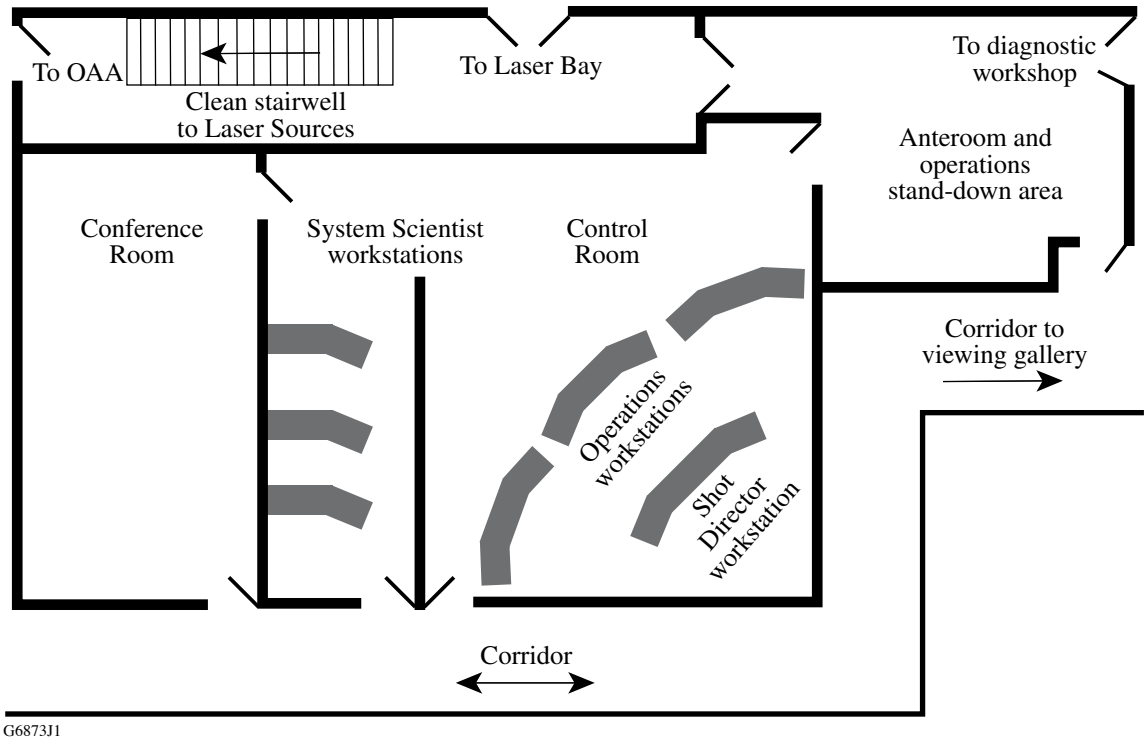

Figure 1.18
An illustration of the OMEGA EP Control Room, anteroom, and conference area. Workspace is also provided for the System Scientists or Principle Investigators. A corridor leading north, directs guests to the Viewing Gallery. The optics assembly area (OAA) is to the south.

1.9.2 Shot Types and Closed Access

Not all shots on OMEGA EP are target shots. Many are used for system preparation, checkout and evaluation, or laser technology research and development. Shot types are used to define the closed access areas during shot operations for safety reasons and to define the staffing requirements. The specifics are defined in LFORM (referenced above). Like OMEGA, there are seven shot types used for OMEGA EP. This strategy obviates the need to modify the communications protocol, OIP.[5] The shot types also have an equivalent meaning (see Table 1.5).

The shot type establishes which of the executive processes must be involved in the shot, the location at which propagation stops, and which bays must be closed to access. In addition, each of the seven shot types may be simulated as a "trigger test" shot: the system state sequence is executed as it would be for an actual shot and the HTS triggers are produced, but no PCU's are charged and the seed pulse is not amplified beyond the driver regenerative amplifiers. The two variations are

- Null template trigger test: No PCU's are included in the Power Conditioning Template.
- Zero volts trigger test: One or more PCU's are included, but the charge voltages are set to zero.

It is also possible to produce the HTS triggers without executing the system state sequence. This is called a "timing test."

[5]Definition: OMEGA Intercommunication Protocol, S-AA-M-020.

Table 1.5: Comparison of the OMEGA and OMEGA EP shot types and the areas in OMEGA EP that have closed access.

Type	OMEGA	OMEGA EP	Closed access areas in OMEGA EP*
1	Charging driver heads only • Pulse may or may not propagate	Glass amplifier pumped • Terminates in Sources Bay • May be nonpropagating	Capacitor Bays
2	Any combination of beamline heads • No seed pulse	Similar to OMEGA, trigger test, includes amplifier test shots	Viewing Gallery** Capacitor Bays** Laser/Target Bay**
3	Propagating to the stage-A splitter	Laser bay, not injected • Sources glass amplifier pumped • Terminates before TSF	Viewing Gallery Capacitor Bays
4	Charging driver and beamline heads • Propagation to beyond Stage A • Terminates in the Laser Bay	Amplified source injected into TSF • Glass amplifier pumped • Injected into TSF	Viewing Gallery Capacitor Bays Laser/Target Bay
5	Charging driver and beamline heads • Propagation to beyond stage A • Terminates at F-ASP's	Amplified source injected into TSF • Glass amplifier pumped • Injected into TSF • One or more booster/power amplifier PCU's fired	Viewing Gallery Capacitor Bays Laser/Target Bay
6	Charging driver and beamline heads • Propagation to TC • Low/no yield	Shot to OMEGA EP target chamber • No short pulses	Viewing Gallery Capacitor Bays Laser/Target Bay Diagnostic Bays OMEGA Target Bay
7	Charging driver and beamline heads • Propagation to TC • High yield****	Shot to either target chamber with short-pulse IR	Viewing Gallery Capacitor Bays Laser/Target Bay Diagnostic Bays OMEGA Target Bay***

* Assumes shield curtain around sources glass amplifiers.
** Depends upon what/how many are charged.
*** If x-ray yield is >10 J
**** For type 7a shots on OMEGA, the OMEGA EP target area structure and GCC shall be considered in a "closed access" state. For type 7b shots on OMEGA, the entire OMEGA EP Laser and Target Bay shall be in "closed access" state.

1.9.3 Shot Request Forms

Execution of effective and safe laser and experimental shots requires a complete and detailed specification of the facility configuration. It must include detailed laser operating parameters, extensive advance planning, and many hours of system preparation prior to, and during, the actual shot day. The Shot Request Form (SRF) is the primary vehicle for recording and communicating the specifications for a shot. SRF's are handled identically between laser systems via a common SRF web page. The SRF enables the requestor to specify whether the shot is an OMEGA, OMEGA EP, or a joint system shot.

A new SRF is required for each shot, whose shot type is three (3) or greater. Supplemental tools and forms are also generally used in planning and communicating the sequences of related shots that are referred to as "campaigns." The SRF is a database object that is created within the LLE computer system primarily via inputs made at a web-based SRF user interface on the "OMEGA Operations" page of the LLE Web site. This interface consists of a series of pages or screens called "forms" that collect information of various types. The SRF pages for OMEGA EP include

- General: laser system, PI's, campaign identification, planned date, planned order
- Sources: short-/long-pulse width, pulse shape, etc.
- Target: characteristics, unique identifier, etc.
- Beams: groups defined by energy, pointing, focus

Target diagnostics are specified via a hierarchical series of groupings and setup forms. Each SRF is automatically assigned a unique, sequential identifying number at the time it is created (RID). Appropriate controls are applied to limit both read and write access to the records. The SRF can be viewed or printed, in part or whole, to provide a standard format for review and implementation. On shot day, SRF data values are also accessed directly by the Laser Control System and used to assist the operators in preparing for and executing the shot. Once a SRF has been used to specify a system shot, it is considered expended and will not be reused. The SRF data values are retained in the database indefinitely. The SRF values, indexed by the unique identifying number, may be retrieved for use in data assessment and can be copied to create new SRF's.

Appendix A

Glossary of Acronyms

ACSL	aperture-coupled strip line
ARC	advanced radiographic capability
ASP	alignment sensor package
AWG	arbitrary waveform generator
CAM	compressor alignment mirror
CCD	charge-coupled device
CEM	cavity end mirror
CLARA	crystal large aperture ring amplifier
CPA	chirped pulse amplification
CSF	cavity spatial filter
cw	continuous wave
DBS	diagnostic beam splitter
DM	deformable mirror
DPP	distributed phase plate
DT	deuterium–tritium
EOS	equation of state
EP	Extended Performance
FCC	frequency-conversion crystal
FI	fast ignitor
FOA	final optical assembly
fs	femtosecond
FWHM	full width at half maximum
GCC	grating compression chamber
GUI	graphical user interface
HED	high energy density
HEPW	high-energy petawatt
HR	high reflector
HTS	Hardware Timing System
ICF	inertial confinement fusion
IFE	inertial fusion energy
IFES	integrated front end source
IR	infrared
IRAT	IR alignment table
IRDP	infrared diagnostics package
KD*P	deuterated potassium dihydrogen phosphate
KDP	potassium dihydrogen phosphate
LBO	lithium triborate
LFORM	Laser Facility Organization and Regulations Manual
LLE	Laboratory for Laser Energetics
LLNL	Lawrence Livermore National Laboratory
LP	long pulse
MLD	multilayer dielectric
MTG	Master Timing Generator
NIF	National Ignition Facility

NNSA	National Nuclear Security Administration
ns	nanosecond
OAA	Optics Assembly Area
OAP	off-axis parabola
OAPI/M	off-axis parabola inserter/manipulators
OIP	OMEGA intercommunications protocol
OPCPA	optical parametric chirped-pulse amplification
PAD	parabola alignment diagnostic
PCE	Power Conditioning Executive
PCU	Power Conditioning Unit
PEPC	plasma-electrode Pockels cell
PI	principle investigator
PMA	periscope mirror assembly
POL	polarizer
POTTS	precision optical timing and triggering system
ps	picosecond
QCDM	quad-channel delay module
RF	reference frequency
RFG	reference frequency generator
RRM	rate regenerator module
SAC	scanning autocorrelator
SD	Shot Director
SE	Shot Executive
SHG	second harmonic generation
SP	short pulse
SPDP	short-pulse diagnostic package
SRF	Shot Request Form
SSP	Stockpile Stewardship Program
TAS	target area structure
TC	target chamber
TCC	target chamber center
TESSA	time-expanded single-shot autocorrelator
T-flat	transmission flat
TG/S	trigger generator/selector unit
TGA	tiled-grating assembly
TIM	ten-inch manipulator
TPS	target positioning system
TSF	transport spatial filter
TVS	Target Viewing System
UROSS	Ultrafast Rochester Optical Streak System
UTD	ultrafast timing diagnostic
UV	ultraviolet
UVAT	UV alignment table
UVDP	UV diagnostics package
VISAR	velocity interferometer system for any reflector